626-2Z

SKF Explorer

Dimensions

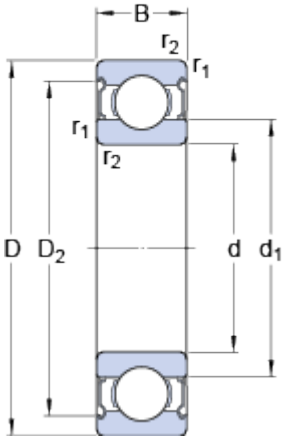

d		6	mm
D		19	mm
B		6	mm
d_1		11.1	mm
D_2		16.5	mm
$r_{1,2}$	min.	0.3	mm

Abutment dimensions

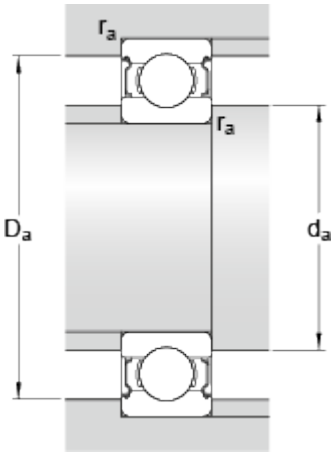

d_a	min.	8.4	mm
d_a	max.	11	mm
D_a	max.	16.6	mm
r_a	max.	0.3	mm

Calculation data

Basic dynamic load rating	C	2.3	kN
Basic static load rating	C_0	0.95	kN
Fatigue load limit	P_u	0.04	kN
Reference speed		80000	r/min
Limiting speed		40000	r/min
Calculation factor	k_r	0.025	
Calculation factor	f_0	13	

Mass

Mass bearing	0.0088	kg