MOFLASH SIGNALLING

LED401/400



Overview

VISUAL SIGNALS - INDUSTRIAL - LED BEACONS

The LED401/400 series are suitable for security, process control & industrial applications, where low maintenance and long life are the pre-requisite requirements. With 144 high brightness LED's, this Beacon produces a powerful, concentrated light output that ensures it can be used for visual signalling over greater distances.

3 modes of operation are available which are selectable via a two-way DIP switch located on the PCB:

1. **Static** mode
2. **Flashing** mode at 1Hz (60 FPM)
3. **Rotating** mode: Single column or Double column

An advantage of the static mode is that it can be controlled via a remote source (ie. control panel / plc etc) offering the potential of a remote flashing option. The design allows for termination inside the enclosure through the base.

If you require a different mounting Base option, please refer to our LED201/200 Datasheet.

Features

- Continuously rated
- Flashing, Static or Rotating
- Low current consumption
- Suitable for surface or wall mounting
- Optional wall bracket - See accessories on page 2
- M20 Cable Gland available to order – Code 50002
- 3 point fix
- 360° light output around the vertical axis
- Available in 24vDC and 85-280vAC/DC

Material

- UV Stable Polycarbonate Lens
- UV Stable ABS Plastic Base

IP 65

144 SMT LED

60 FPM*

140 RPM**

-25 to +55°C

50/60Hz

*Flashes Per Minute **Rotation Per Minute

ISSUE 1

uksales@moflash.co.uk
moflashkm@moflash.com
exportsales@moflash.co.uk

11 Upper Conybere Street
Highgate, Birmingham
B12 0EB, England

UK +44(0)121 446 5322
FR +33(0)1 70 72 12 71

www.moflash.com

APPROVALS & CONFORMITIES

UKCA CE RoHS

MOFLASH SIGNALLING

LED401/400

Ordering Information

Voltage	Ordering Information					Mode & Current Consumption			
Voltage Range	Amber	Red	Blue	Green	Clear	Flashing	Static	Rotating 1 Column	Rotating 2 Column
24vDC	LED401-02-01	LED401-02-02	LED401-02-03	LED401-02-04	LED401-02-05	280mA @24vDC	527mA @24vDC	53mA @24vDC	100mA @24vDC
85-280vAC/DC	LED400-04-01	LED400-04-02	LED400-04-03	LED400-04-04	LED400-04-05	31mA @230vAC	57mA @230vAC	16mA @230vAC	31mA @230vAC

Effective Candela (Cd) - Formula Blondel-Rey				
Amber	Red	Blue	Green	Clear
79.67	66.81	12.05	39.61	122.22

Weights & Dimensional Drawings

Kg	24v	230v
Net Weight	0.510	0.550
Gross Weight	0.588	0.628

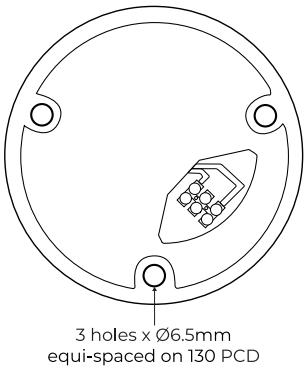

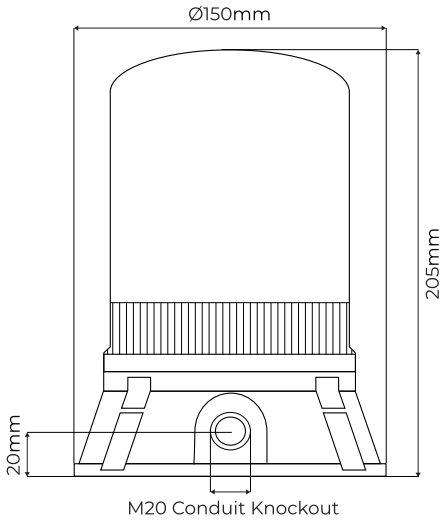

Accessories

Part Code	Description
50010	Cage Guard - Suitable for use with the 200/400/500 Series Beacon range **(Cannot be fitted with Wall Bracket)**
50004	Angled Wall Bracket - Suitable for use with the 200/400/500 Series Beacon range **(Cannot be fitted with Cage guard)**
50064	Amber Lens - Suitable for use with the 200/400/500 Series Beacon range.
50065	Red Lens - Suitable for use with the 200/400/500 Series Beacon range.
50066	Blue Lens - Suitable for use with the 200/400/500 Series Beacon range.
50067	Green Lens - Suitable for use with the 200/400/500 Series Beacon range.
50068	Clear Lens - Suitable for use with the 200/400/500 Series Beacon range.


50010


50004


50064


50065


50066


50067


50068

uksales@moflash.co.uk
moflashkm@moflash.com
exportsales@moflash.co.uk
UK +44(0)121 446 5322
FR +33(0)1 70 72 12 71
11 Upper Conybere Street
Highgate, Birmingham
B12 0EB, England
www.moflash.com

APPROVALS & CONFORMITIES