HENGSTLER

TECHNICAL DATASHEET

Heavy Duty - Absolute Encoder AR 62/63



AR 62



AR 63 Stainless Steel

- Single– and Multi turn: Resolution up to 28 Bit
- Wearless electronic multi turn: contact -and battery less, self-energetic
- 300 N axial and radial load
- 200 g shock resistance/ 20 g vibration resistance
- Submersible: Protection class up to IP69K
- High temperature range: -40 ... +100 °C
- Compact design: 32 mm mounting depth
- Option: Stainless steel housing
- Suitable for maritime applications (DNV approved)
- CANopen interface with E1 approval for vehicle application
- Analog interface: Measuring range in Degrees; Current or voltage output

ACURO® robust CANopen SSI

TYPE APPROVED PRODUCT DNV DNV.COM/AF E1 10 R - 036823 CE c UL us LISTED

GENERAL INFORMATION

AR62/ 63 - THE ROBUST ENCODER FOR ALL ENVIRONMENTAL CONDITIONS !

The special features of the AR62/ 63 not only comprise its particularly rugged enclosure, but also generously dimensioned, rigid ball-bearings.

The AR62/ 63 was designed to easily withstands highest accelerations, extreme climatic fluctuations and even underwater operation. In this way, our rugged absolute encoder is ideally suitable for applications in wind farms, marine or utility vehicle applications, as well as for use in presses or wood and stone processing machinery: applications where high resistance to harsh environments and maximum reliability are required at the same time.

The AR62 is electrically compatible with standard industrial drives. Available interfaces are SSI, CANopen and Analog (0 ... 10 V or 4 ... 20 mA).

Single turn resolution is 12 bit, i.e. one revolution (360°) is resolved into 4096 measuring steps. The AR62/63 comes with a breakthrough multiturn technology, that provides a unique set of advantages:
it operates contact less, self energetic, without battery and moving parts. Standard multi turn resolution is 16 Bit for CANopen interface.

With an installed depth of only 32 mm, this encoder is the most compact type in its class. Valuable space has been saved - to the benefit of the overall machinery design.

APPLICATIONS

Fields of application that clearly unfold the benefits of ACURO-robust:

- Construction machinery
- Utility vehicles / trucks
- Gantry cranes
- Marine equipment
- Offshore plants
- Wind power plants
- Commercial solar plants
- Food & Beverage Industry
- Filling plants
- Presses
- Your individual application

Specifications subject to change without notice.

TECHNICAL DATASHEET

Heavy Duty - Absolute Encoder AR 62/63

TECHNICAL DATA mechanical

Housing diameter	58 mm
Mounting depth	32 mm
Shaft diameter[1]	10 mm (Solid shaft)
Flange (Mounting of housing)	Synchro clamping flange
Protection class shaft input (EN 60529)	IP67 or IP69K
Protection class housing (EN 60529)	IP67 or IP69K
Shaft load axial / radial	max.: 300 N / 300 N
Max. speed	max. 1.500 rpm (continuous), max. 5.000 rpm (short term)
Starting torque typ.	⍰ 4,5 Ncm
Moment of inertia	25 gcm²
Vibration resistance (DIN EN 60068-2-6)	200 m/s²
Shock resistance (DIN EN 60068-2-27)	2.000 m/s² (6 ms)
Operating temperature	SSI: -40 °C ... +100 °C with maritime approval (DNV): -40 °C ... +85 °C [2] CANopen, Analog: -40 °C ... +85 °C
Relative humidity	max. 93% RLF
Max. altitude for operation	max. 2000m
Connection	M12 connector, radial Cable radial, PVC Cable radial for maritime approval (halogen-free, flame retardant, self-extinguishing)

[1] 12 mm shaft on request
[2] due to cable with maritime approval (DNV)

TECHNICAL DATA electrical

Supply voltage	DC 10 - 30V (+10%) Analog: DC 17 - 30 V (+10%)
EMC	EN 61326-1
Resolution singleturn (interface: SG, SB, OL)	12 Bit
Resolution multiturn [1] interface: CANopen (OL)	12 Bit, 13 Bit, 16 Bit
Analog interface [2] (interface: AV, A4)	0 ...10 V (Voltage) 4 … 20 mA (Current)
Resolution Analog Output [2, 3] (interface: AV, A4)	12 bit
Measuring range in degrees [2] (interface: AV, A4)	90°, 180°, 360°, other on request
Absolute accuracy	±1°
Repeatability	±0,2°
Control inputs [2]	Preset, Direction

[1] other on request
[2] only analog interface
[3] based on the total measuring range
[4] Preset and Direction available for SSI and Analog interface. Preset value: Zero (other on request)

Specifications subject to change without notice.

ELECTRICAL CONNECTIONS SSI

Color	PIN (M12, 8 poles)	Signal
yellow	6	Clock
pink	5	Data
green	4	$\overline{\text{Clock}}$
grey	8	$\overline{\text{Data}}$
white	1	UB
brown	2	0 V
red	3	Preset (set to 0) [1]
blue	7	Direction[1]
Screen	Screen	Screen

[1] Preset and Direction high active :
Signal level high: ⍰ 66% Ub; low: ⍰ 15% Ub or unconnected
Bounce time preset: >2s
Bounce time direction: < 1 ms (dynamic)

ELECTRICAL CONNECTIONS CANopen

Color	Signal	PIN (M12, 8 poles)	PIN (M12, 5 poles)
yellow	CAN in+	6	4
green	CAN in-	4	5
pink	CAN out+	5	-
grey	CAN out-	8	-
blue	CAN GND in	7	1
black*	CAN GND out	3	-
white	UB	1	2
brown	0 V	2	3
Screen	Screen	Screen	Screen

*cable color red for extension cable

ELECTRICAL CONNECTIONS Analog

Color	PIN	Signal
pink	5	0 ... 10 V (Voltage), 4 … 20 mA (Current)
blue[2]	7	Direction (change value counting)
grey	8	AGND (Analog ground)
red [2]	3	Preset (set to 0)
white	1	UB
brown	2	0 V (connected with AGND)
yellow [1]	6	
green [1]	4	
Screen	Screen	Screen

[1] Diagnostic signals only for service purposes. The cable wires have to be isolated.

[2] Preset and Direction low active : Signal level high ⍰ DC 2 V

DIMENSIONED DRAWINGS

Clamping flange

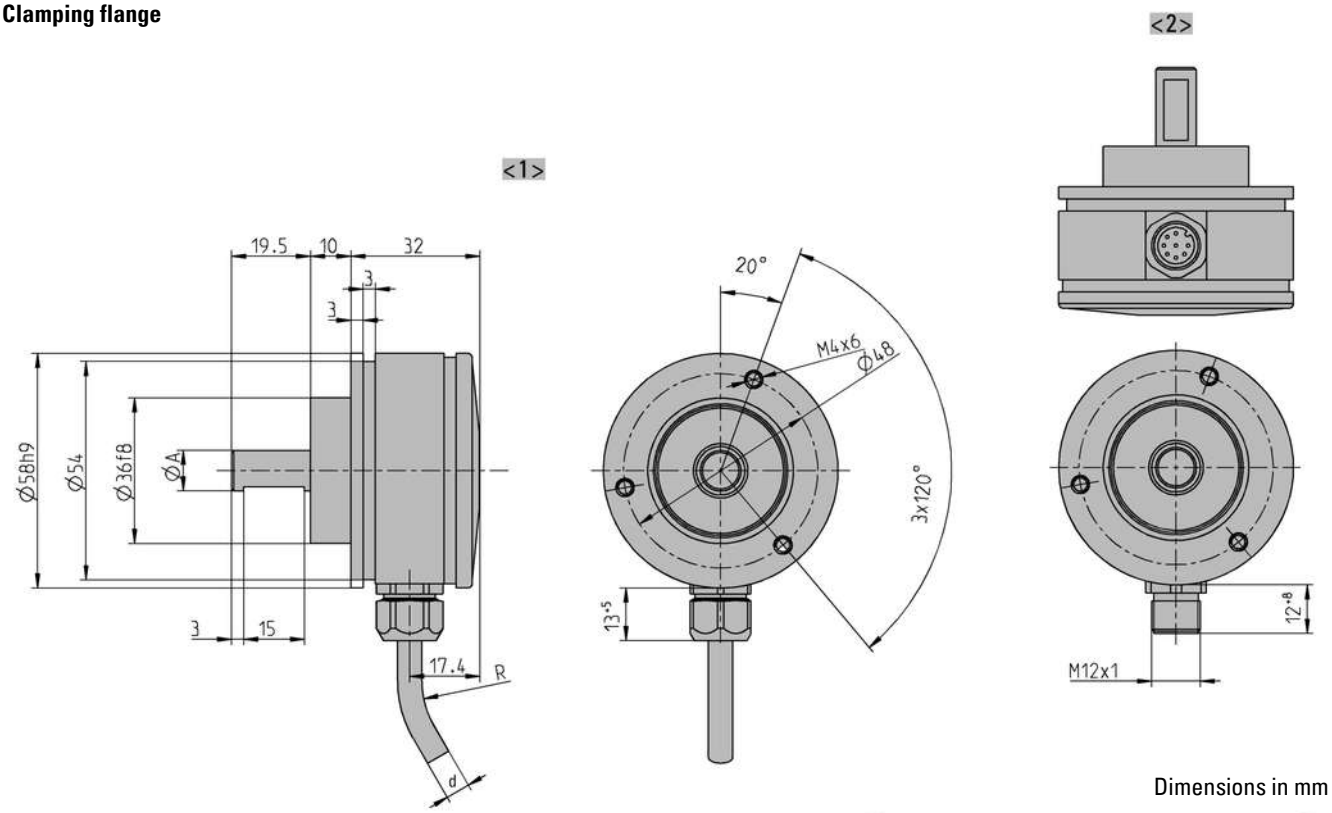

Dimensions in mm

Mounting	
Flange, Protection, Shaft (see ordering information)	Shaft-Ø A
L.72	10f8
L.92	10f8

<1> Connection "B": Cable radial
<2> Connection "8": M12, 8-pole
Cable-Ø d Analog: $7{,}1^{+1{,}2}$
Cable bending radius R for flexible installation ⍰ 15 x cable diameter
Cable bending radius R fixed installation ⍰ 7,5 x cable diameter

DIMENSIONED DRAWINGS (continued)

Square flange

SSI/CANopen/Analog: Ø7.1+1.2
R bei bewegtem Einsatz => 15 x Kabeldurchmesser
R bei fester Verlegung => 7.5 x Kabeldurchmesser

R for alternating bending => 15 x Cable diameter
R for permanent bending => 7.5 x Cable diameter

Anschluss/Connection: "B" Kabel radial
Cable radial

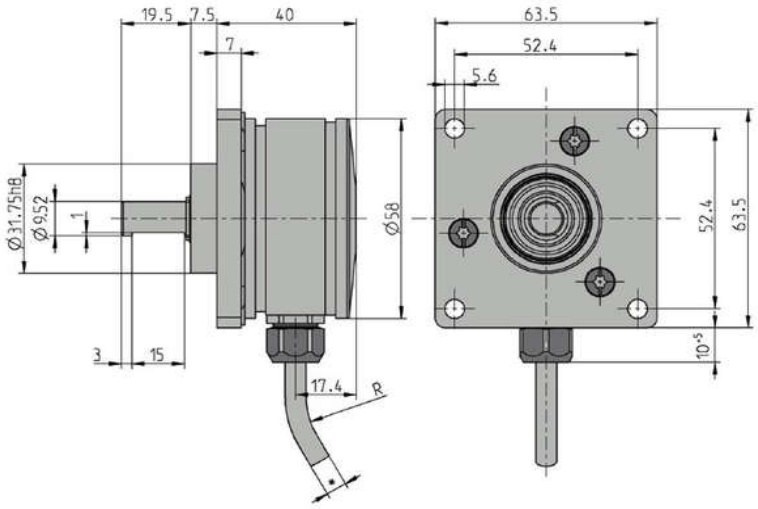

Anschluss/Connection: "8"
M12 8p.

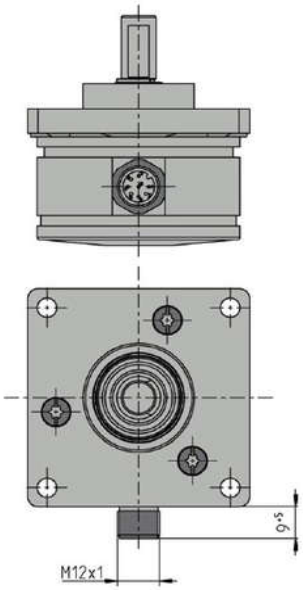

Dimensions in mm

Heavy Duty - Absolute Encoder AR 62/63

ORDERING INFORMATION
CANopen

Type	Measuring range [1]	Supply voltage	Flange [2], Protection, Shaft	Interface [3, 4]	Connection [5, 6, 7]
AR62 Aluminum **AR63** Stainless Steel	**0012** 12 Bit ST **1212** 12 Bit MT + 12 Bit ST **1312** 13 Bit MT + 12 Bit ST **1612** 16 Bit MT + 12 Bit ST	**E** DC 10 - 30 V	**L.72** Synchro clamping, IP67, 10 mm **L.92** Synchro clamping, IP69K, 10 mm **Q.76** Square, IP67, 9,52 mm **Q.96** Square, IP69K, 9,52 mm	**OL** CANopen	**B** Cable radial, standard types **F** Cable radial with maritime approval (DNV) **5** M12-connector, 5-pole, radial **8** M12-connector, 8-pole, radial

[1] Other resolution on request.
[2] Square flange with stainless housing (AR63) on request.
[3] Standard setting CANopen: Bus termination not activated. External bus terminal resistor required.
[4] E1 approval only with interface "OL" CANopen available.
[5] M12 Connector not available in stainless steel. IP67 and IP69k only guaranteed if mating plug connected correctly.
[6] DNV approval only with connection "5", "8" or "F" available.
[7] max. Operating temperature with connection "F": -40 °C ... +85 °C

ORDERING INFORMATION
SSI

Type	Measuring range [1]	Supply voltage	Flange [2], Protection, Shaft	Interface	Connection [3, 4, 5]
AR62 Aluminum **AR63** Stainless Steel	**0012** 12 Bit ST	**E** DC 10 - 30 V	**L.72** Synchro clamping, IP67, 10 mm **L.92** Synchro clamping, IP69K, 10 mm **Q.76** Square, IP67, 9,52 mm **Q.96** Square, IP69K, 9,52 mm	**SB** SSI Binary **SG** SSI Gray	**B** Cable radial, standard types **F** Cable radial with maritime approval (DNV) **8** M12-connector, 8-pole, radial

[1] Other resolution on request.
[2] Square flange with stainless housing (AR63) on request.
[3] M12 Connector not available in stainless steel. IP67 and IP69k only guaranteed if mating plug connected correctly.
[4] DNV approval only with connection "8" or "F" available.
[5] max. Operating temperature with connection "F": -40 °C ... +85 °C

Specifications subject to change without notice.

© Hengstler GmbH Uhlandstr. 49 D-78554 Aldingen/ Germany
☎+49 74 24 -89 0 Fax +49 74 24 - 89 500
E-mail: info@hengstler.com Internet: www.hengstler.com

Heavy Duty - Absolute Encoder AR 62/63

ORDERING INFORMATION
Analog

Type	Measuring range [1, 2]	Supply voltage	Flange[3], Protection, Shaft	Interface	Connection [4, 5, 6]
AR62 Aluminum **AR63** Stainless Steel	measuring range in degree: **G090** 90° **G180** 180° **G360** 360° other on request	**F** DC 17 - 30 V	**L.72** Synchro clamping, IP67, 10 mm **L.92** Synchro clamping, IP69K, 10 mm **Q.76** Square, IP67, 9,52 mm **Q.96** Square, IP69K, 9,52 mm	**AV** Analog 0 … 10 V **A4** Analog 4 … 20 mA	**B** Cable radial, standard types **F** Cable radial with maritime approval (DNV GL) **8** M12-connector, 8-pole, radial

[1] Coding of the measuring range in degree
[2] Measuring Range G360 = 360° similar to former definition 0012 = 12 Bit ST
[3] Square flange with stainless housing (AR63) on request.
[4] M12 Connector not available in stainless steel. IP67 and IP69k only guaranteed if mating plug connected correctly.
[5] DNV GL approval only with connection "8" or "F" available.
[6] max. Operating temperature with connection "F": -40 °C ... +85 °C

ORDERING INFORMATION
Selection of cable length

Versions with cable outlet (connection A, B, E or F) are available with various lengths of cable. To order your desired cable length, please add the respective code to the end of your ordering code. For variants with connector on cable end please add cable length code in between. Further cable lengths on request.

Code	Cable length	Code	Cable length
without Code	1,5 m	-U0	20 m
-D0	3 m	-V0	25 m
-F0	5 m	-W0	30 m
-K0	10 m	-X0	40 m
-P0	15 m	-Y0	50 m

Example: Cable 3 m length: ... B - D0
Example: Cable mit 3 m length and M23 connector, cw: ... B- D0 - I

Specifications subject to change without notice.

© Hengstler GmbH Uhlandstr. 49 D-78554 Aldingen/ Germany
☎+49 74 24 -89 0 Fax +49 74 24 - 89 500
E-mail: info@hengstler.com Internet: www.hengstler.com

OUTPUT SIGNALS

Measuring range in degrees (>0° to 360°)

Measuring range 360°

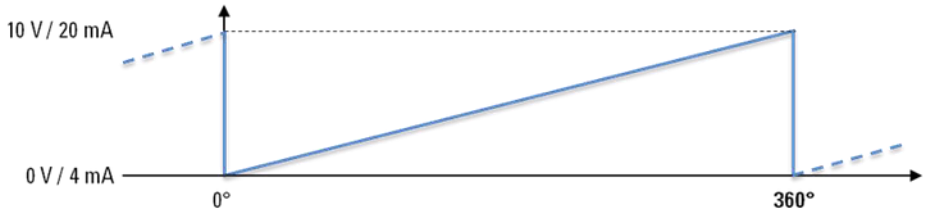

Measuring range 180°

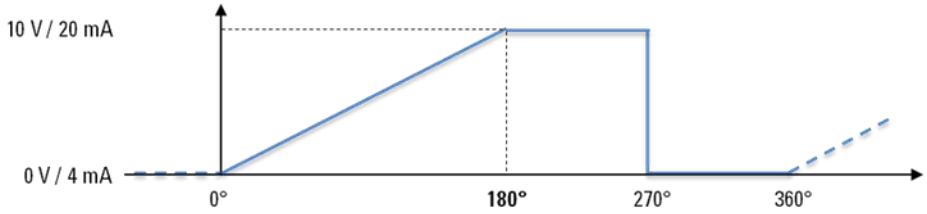

Measuring range 90°

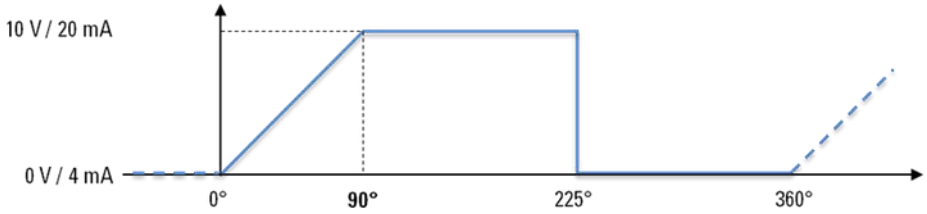

Default Setting: Output signal rotation cw (clockwise) with a view to the shaft.

© Hengstler GmbH Uhlandstr. 49 D-78554 Aldingen/ Germany
☎+49 74 24 -89 0 Fax +49 74 24 - 89 500
E-mail: info@hengstler.com Internet: www.hengstler.com