ISSUE DATE: 06/05/2014

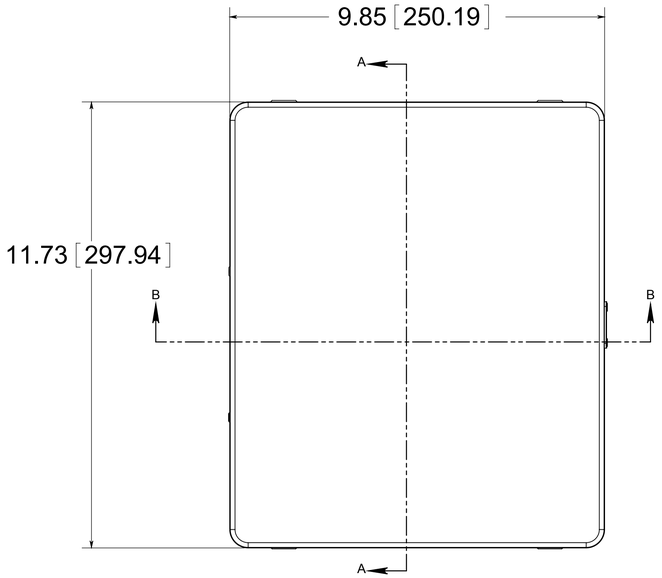

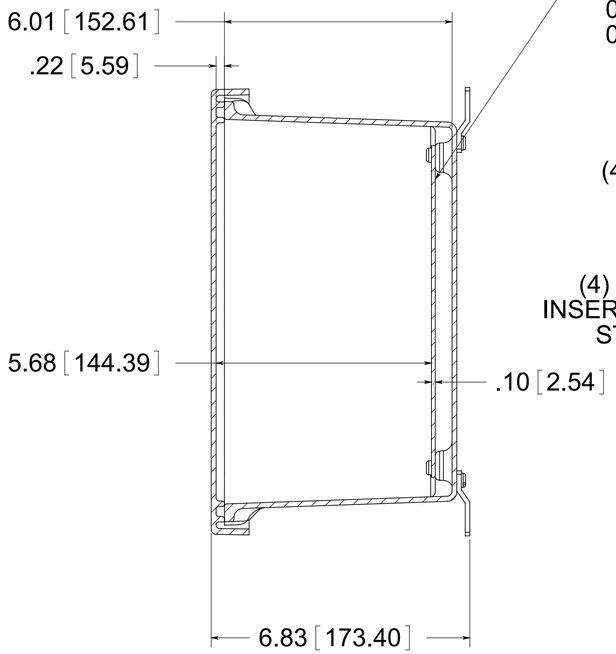

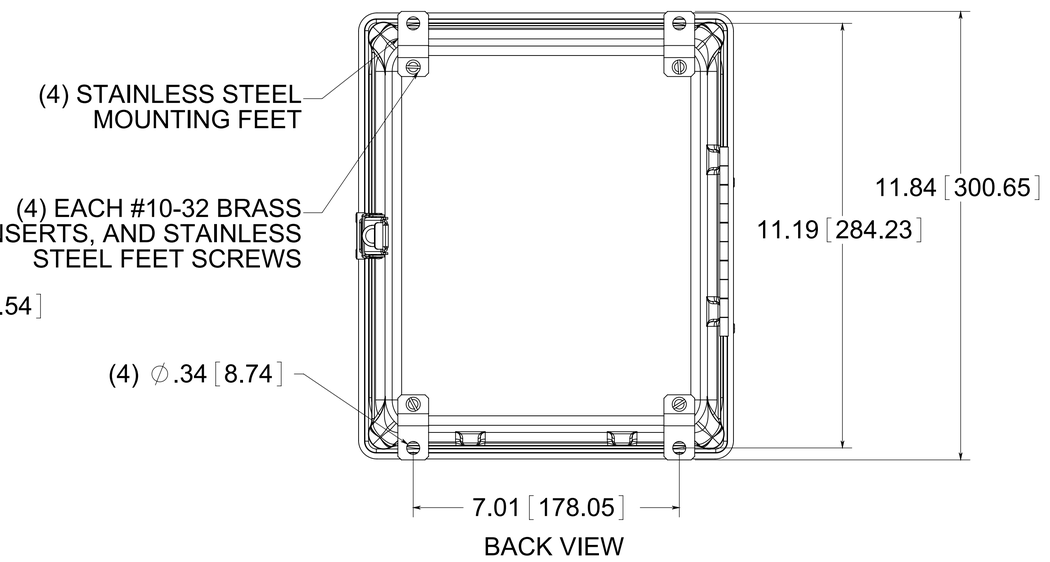

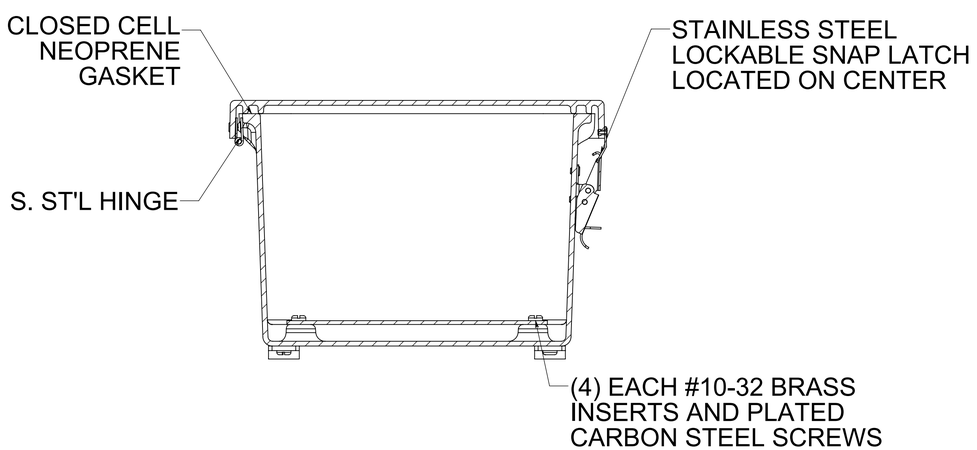

MATERIAL:
BOX- COMPRESSION MOLDED FIBERGLASS REINFORCED POLYESTER
COVER- COMPRESSION MOLDED FIBERGLASS REINFORCED POLYESTER
WINDOWS- POLYCARBONATE

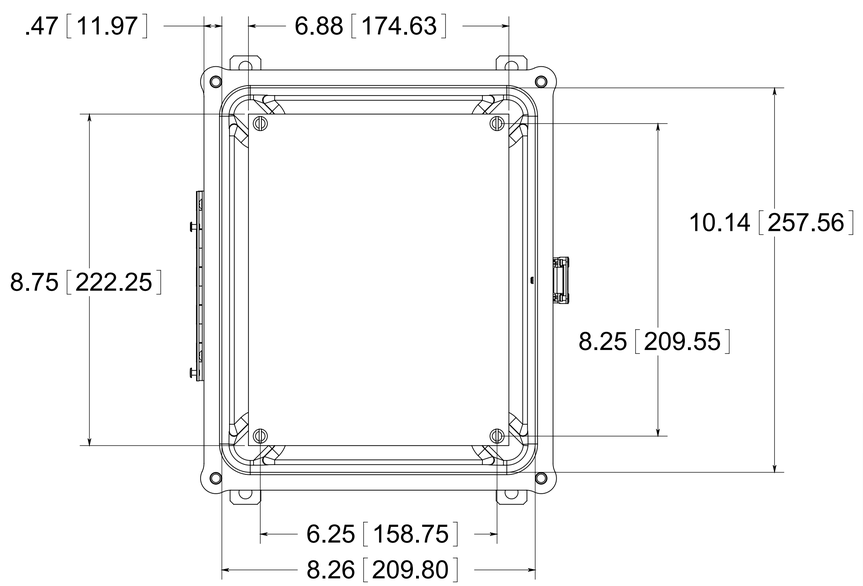

PART No. PJ1086L
for more information visit
www.hammfg.com
Data subject to change without notice
Drawing Not to Scale