JUMO GmbH & Co. KG
Delivery address: Mackenrodtstraße 14
36039 Fulda, Germany
Postal address: 36035 Fulda, Germany
Phone: +49 661 6003-0
Fax: +49 661 6003-607
Email: mail@jumo.net
Internet: www.jumo.net

JUMO Instrument Co. Ltd.
JUMO House
Temple Bank, Riverway
Harlow, Essex, CM20 2DY, UK
Phone: +44 1279 63 55 33
Fax: +44 1279 62 50 29
Email: sales@jumo.co.uk
Internet: www.jumo.co.uk

JUMO Process Control, Inc.
6733 Myers Road
East Syracuse, NY 13057, USA
Phone: +1 315 437 5866
Fax: +1 315 437 5860
Email: info.us@jumo.net
Internet: www.jumousa.com

Retractable Fitting

Series 202822

Brief description

The quick-change fittings, which can be operated manually, permit sensor mounting and removal under process conditions, which means that the liquid cycle concerned, or the main flow, need not be interrupted. Quick-change fittings are mainly used for pH measurements in closed cycles, or for measurements in the inflow and outflow of water purification plants. The quick-change fitting can also be installed at the side of the tank, which allows the sensor to be removed without previously emptying the tank. The fitting enables the mounting of one sensor with a Pg13.5 thread and a mounting length of 120 or 225mm.



Type 202822/106.../26

Applications

- Measurements in closed liquid cycles, e.g. pH measurement in cooling and water purification plants
- Measurements in closed containers and tanks
- Final pH check in outflow, if a bypass is not possible
- Type 202822/106-135-..
  fitting with screw-in thread G1A, material: stainless steel or PP,
  for installing one sensor with a Pg 13.5 thread and a mounting length of 225 mm
- Type 202822/105-62-..
  fitting with screw-in thread G3/4A, material: stainless steel or PP,
  for installing one sensor with a Pg 13.5 thread and a mounting length of 120 mm
- Type 202822/613-48-26
  fitting with clamp connection, material: stainless steel,
  for installing one sensor with a Pg 13.5 thread and a mounting length of 120 mm

Further fittings

Fitting type	Data sheet
Flow-through fittings	202810
Immersion fittings	202820
Process immersion fitting	202821
Quick-change fittings	202822
Pneumatic retractable fitting	202823
Process fittings	202825



Type 202822/613.../26

JUMO GmbH & Co. KG
Delivery address: Mackenrodtstraße 14
36039 Fulda, Germany
Postal address: 36035 Fulda, Germany
Phone: +49 661 6003-0
Fax: +49 661 6003-607
Email: mail@jumo.net
Internet: www.jumo.net

JUMO Instrument Co. Ltd.
JUMO House
Temple Bank, Riverway
Harlow, Essex, CM20 2DY, UK
Phone: +44 1279 63 55 33
Fax: +44 1279 62 50 29
Email: sales@jumo.co.uk
Internet: www.jumo.co.uk

JUMO Process Control, Inc.
6733 Myers Road
East Syracuse, NY 13057, USA
Phone: +1 315 437 5866
Fax: +1 315 437 5860
Email: info.us@jumo.net
Internet: www.jumousa.com

Technical data

Parts in contact with medium	Stainless steel 1.4571 and FPM or PP and FPM
Permissible temperature[a]	-30 to +135 °C stainless steel -10 to +60 °C PP
Safe pressure at 25 °C	up to 10 bar for stainless steel up to 6 bar for PP
Seal	FPM
Protection type	IP65
Mounting position	Please observe the mounting instructions for the sensor that is used.
Electrode holder	Pg13.5 thread A type 202995 impedance converter or a type 202705 two-wire transmitter (JUMO digiLine with analog output) can be incorporated.
Weight	Type 202822/105-062-26: 0.8 kg Type 202822/106-135-26: 1.0 kg Type 202822/613-048-26: 1.2 kg

[a] Please also note the maximum operating data for the sensor used! It is **not** possible to remove the sensor at maximum temperature!

Mounting options

Type 202822/106-135...

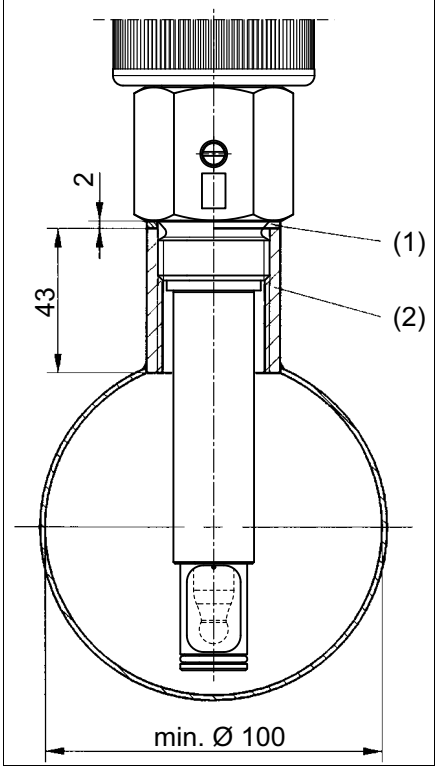

Type 202822/105-062..

Insertion in a pipeline

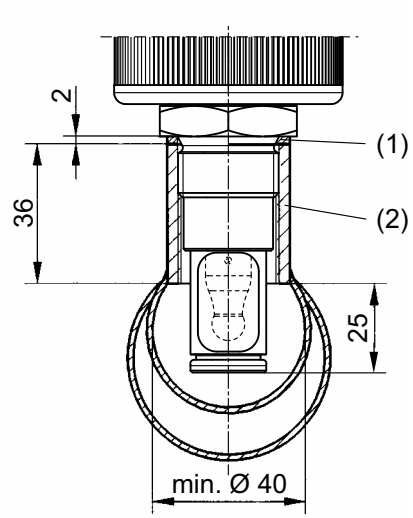

Insertion in a vessel

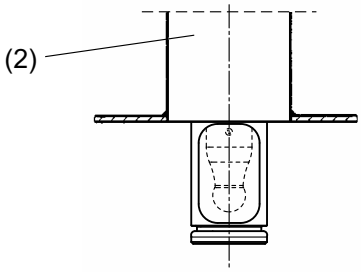

(1) Seal (not include in delivery)

(2) Sleeve DIN 2986-1

JUMO GmbH & Co. KG
Delivery address: Mackenrodtstraße 14
36039 Fulda, Germany
Postal address: 36035 Fulda, Germany
Phone: +49 661 6003-0
Fax: +49 661 6003-607
Email: mail@jumo.net
Internet: www.jumo.net

JUMO Instrument Co. Ltd.
JUMO House
Temple Bank, Riverway
Harlow, Essex, CM20 2DY, UK
Phone: +44 1279 63 55 33
Fax: +44 1279 62 50 29
Email: sales@jumo.co.uk
Internet: www.jumo.co.uk

JUMO Process Control, Inc.
6733 Myers Road
East Syracuse, NY 13057, USA
Phone: +1 315 437 5866
Fax: +1 315 437 5860
Email: info.us@jumo.net
Internet: www.jumousa.com

Dimensions

Type 202822/105-062-26

Position: "Service“ (install/remove sensor)

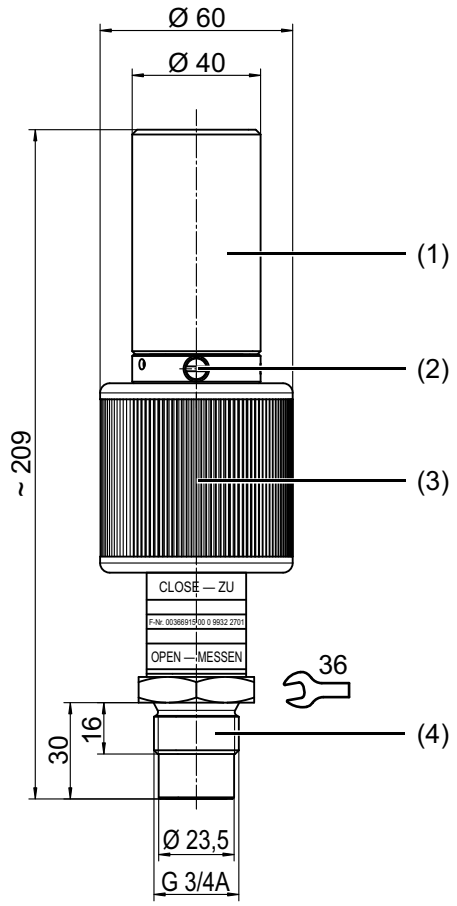

Position: „Measurement“

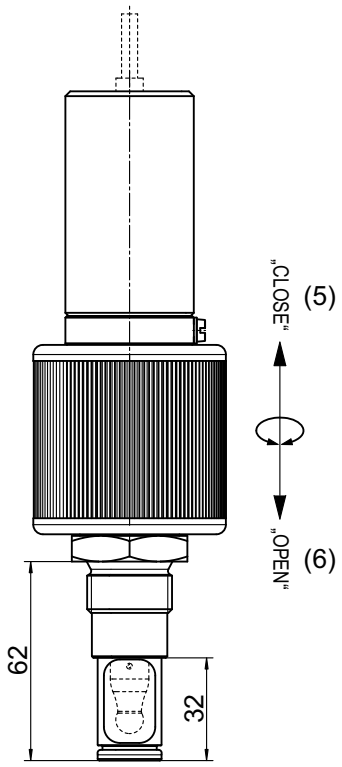

(1) Protective cap, PP
(2) Grounding screw
(3) Union nut, PP
(4) Connection G 3/4 A, stainless steel
(5) Position „closed“
(6) Position „open“

JUMO GmbH & Co. KG
Delivery address: Mackenrodtstraße 14
36039 Fulda, Germany
Postal address: 36035 Fulda, Germany
Phone: +49 661 6003-0
Fax: +49 661 6003-607
Email: mail@jumo.net
Internet: www.jumo.net

JUMO Instrument Co. Ltd.
JUMO House
Temple Bank, Riverway
Harlow, Essex, CM20 2DY, UK
Phone: +44 1279 63 55 33
Fax: +44 1279 62 50 29
Email: sales@jumo.co.uk
Internet: www.jumo.co.uk

JUMO Process Control, Inc.
6733 Myers Road
East Syracuse, NY 13057, USA
Phone: +1 315 437 5866
Fax: +1 315 437 5860
Email: info.us@jumo.net
Internet: www.jumousa.com

Type 202822/105-062-87

Position: "Service“ (install/remove sensor)

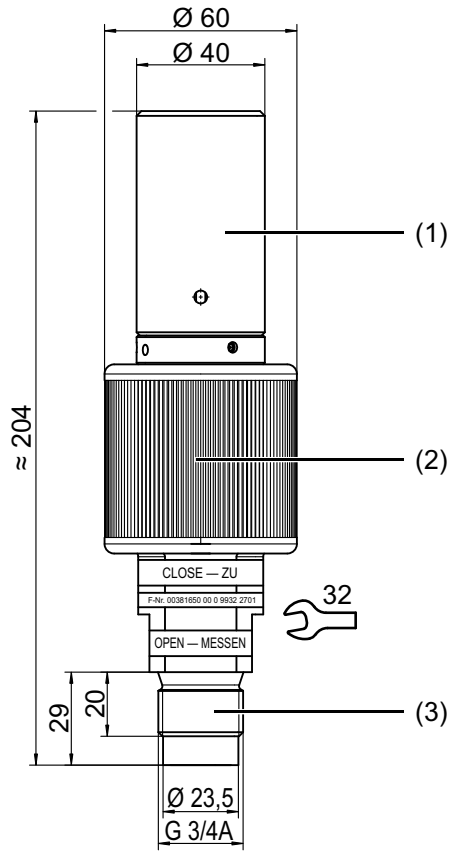

Position: „Measurement“

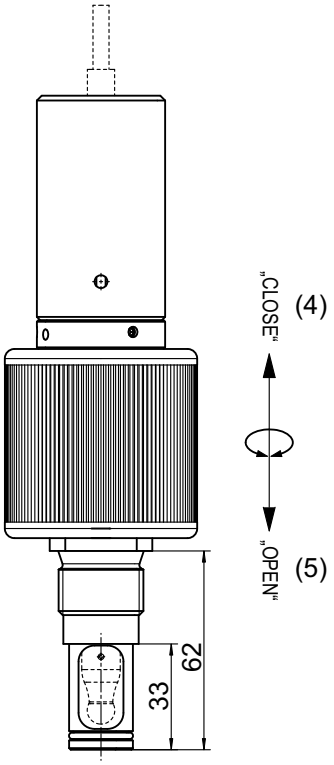

(1) Protective cap, PP
(2) Union nut, PP
(3) Connection G 3/4 A, PP
(4) Position „closed“
(5) Position „open“

JUMO GmbH & Co. KG
Delivery address: Mackenrodtstraße 14
36039 Fulda, Germany
Postal address: 36035 Fulda, Germany
Phone: +49 661 6003-0
Fax: +49 661 6003-607
Email: mail@jumo.net
Internet: www.jumo.net

JUMO Instrument Co. Ltd.
JUMO House
Temple Bank, Riverway
Harlow, Essex, CM20 2DY, UK
Phone: +44 1279 63 55 33
Fax: +44 1279 62 50 29
Email: sales@jumo.co.uk
Internet: www.jumo.co.uk

JUMO Process Control, Inc.
6733 Myers Road
East Syracuse, NY 13057, USA
Phone: +1 315 437 5866
Fax: +1 315 437 5860
Email: info.us@jumo.net
Internet: www.jumousa.com

Type 202822/106-135-26

Position: "Service“ (install/remove sensor)

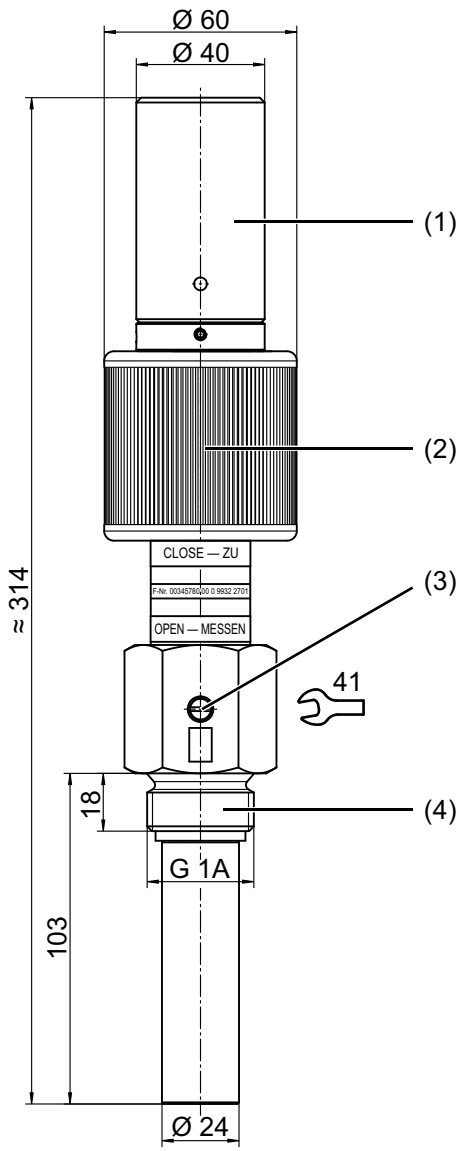

Position: „Measurement“

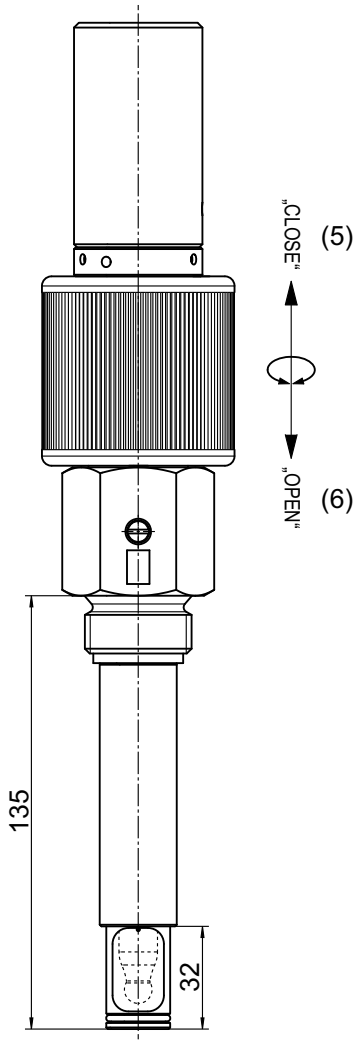

(1) Protective cap, PP
(2) Union nut, PP
(3) Grounding screw
(4) Connection G 1 A, stainless steel
(5) Position „closed“
(6) Position „open“

JUMO GmbH & Co. KG
Delivery address: Mackenrodtstraße 14
36039 Fulda, Germany
Postal address: 36035 Fulda, Germany
Phone: +49 661 6003-0
Fax: +49 661 6003-607
Email: mail@jumo.net
Internet: www.jumo.net

JUMO Instrument Co. Ltd.
JUMO House
Temple Bank, Riverway
Harlow, Essex, CM20 2DY, UK
Phone: +44 1279 63 55 33
Fax: +44 1279 62 50 29
Email: sales@jumo.co.uk
Internet: www.jumo.co.uk

JUMO Process Control, Inc.
6733 Myers Road
East Syracuse, NY 13057, USA
Phone: +1 315 437 5866
Fax: +1 315 437 5860
Email: info.us@jumo.net
Internet: www.jumousa.com

Type 202822/106-135-87

Position: "Service“ (install/remove sensor)

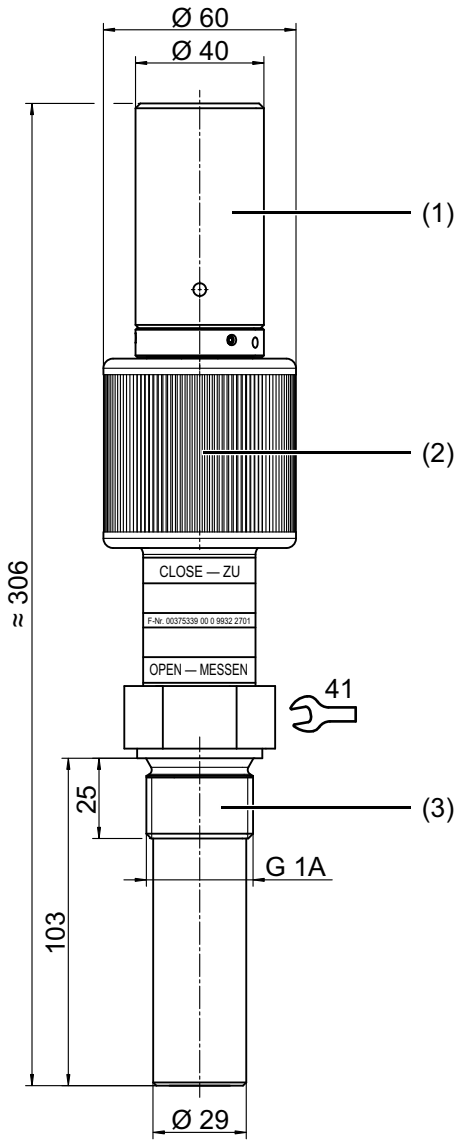

Position: „Measurement“

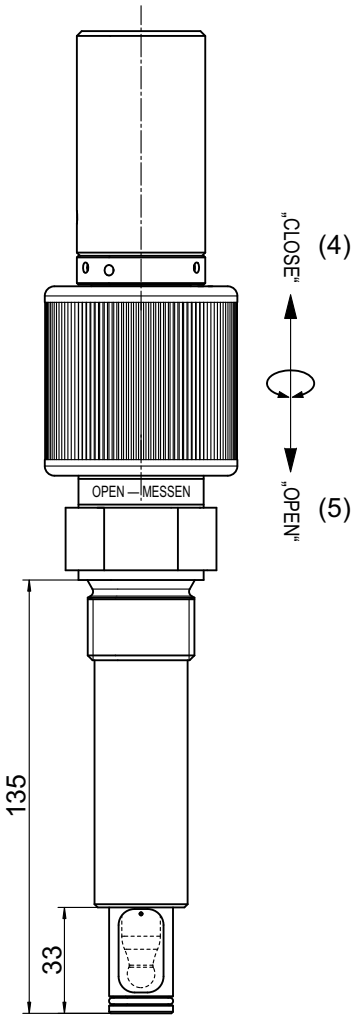

(1) Protective cap, PP
(2) Union nut, PP
(3) Connection G 3/4 A, PP
(4) Position „closed“
(5) Position „open“

JUMO GmbH & Co. KG
Delivery address: Mackenrodtstraße 14
36039 Fulda, Germany
Postal address: 36035 Fulda, Germany
Phone: +49 661 6003-0
Fax: +49 661 6003-607
Email: mail@jumo.net
Internet: www.jumo.net

JUMO Instrument Co. Ltd.
JUMO House
Temple Bank, Riverway
Harlow, Essex, CM20 2DY, UK
Phone: +44 1279 63 55 33
Fax: +44 1279 62 50 29
Email: sales@jumo.co.uk
Internet: www.jumo.co.uk

JUMO Process Control, Inc.
6733 Myers Road
East Syracuse, NY 13057, USA
Phone: +1 315 437 5866
Fax: +1 315 437 5860
Email: info.us@jumo.net
Internet: www.jumousa.com

Type 202822/613-048-26

Position: "Service“ (install/remove sensor)

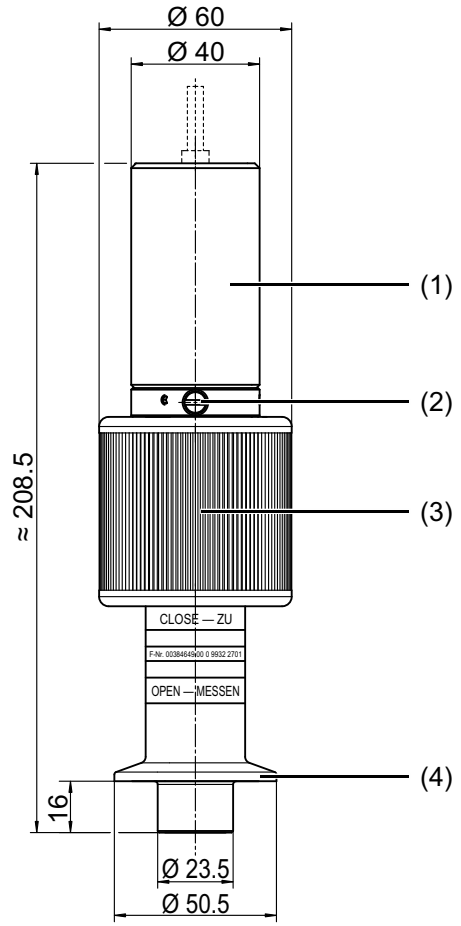

Position: „Measurement“

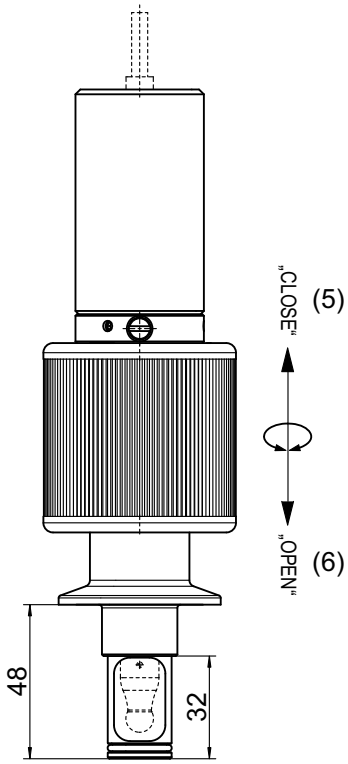

(1) Protective cap, PP
(2) Grounding screw
(3) Union nut, PP
(4) Connection Clamp DN 25/32/40, stainless steel
(5) Position „closed“
(6) Position „open“

JUMO GmbH & Co. KG
Delivery address: Mackenrodtstraße 14
36039 Fulda, Germany
Postal address: 36035 Fulda, Germany
Phone: +49 661 6003-0
Fax: +49 661 6003-607
Email: mail@jumo.net
Internet: www.jumo.net

JUMO Instrument Co. Ltd.
JUMO House
Temple Bank, Riverway
Harlow, Essex, CM20 2DY, UK
Phone: +44 1279 63 55 33
Fax: +44 1279 62 50 29
Email: sales@jumo.co.uk
Internet: www.jumo.co.uk

JUMO Process Control, Inc.
6733 Myers Road
East Syracuse, NY 13057, USA
Phone: +1 315 437 5866
Fax: +1 315 437 5860
Email: info.us@jumo.net
Internet: www.jumousa.com

Order details

			(1)	**Basic type**
			202822	Manual quick-change fitting
			(2)	**Process connection**
			105	Screw-in thread G 3/4 A[a] (3/4" pipe)
			106	Screw-in thread G 1 A[b] (1" pipe)
			613	Clamp connection DN 25/32/40 according to DIN 32676[a]
			(3)	**Insertion length**
		X	048	48 mm
X			062	62 mm
	X		135	135 mm
			(4)	**Material**
X	X	X	26	Parts in contact with medium: stainless steel 1.4571
O	O		87	Polypropylene (PP)

[a] For electrodes with an insertion length of 120 mm.

[b] For electrodes with an insertion length of 225 mm.

X = standard

O = as an option

	(1)		(2)		(3)		(4)
Order code		/		-		-	
Order example	202822	/	105	-	062	-	26

Note:

The order code is not modular. When placing orders, if possible please select the items listed under "**Stock versions**". We must check the technical feasibility of and approve freely chosen combinations of individual code parts.

JUMO GmbH & Co. KG
Delivery address: Mackenrodtstraße 14
36039 Fulda, Germany
Postal address: 36035 Fulda, Germany
Phone: +49 661 6003-0
Fax: +49 661 6003-607
Email: mail@jumo.net
Internet: www.jumo.net

JUMO Instrument Co. Ltd.
JUMO House
Temple Bank, Riverway
Harlow, Essex, CM20 2DY, UK
Phone: +44 1279 63 55 33
Fax: +44 1279 62 50 29
Email: sales@jumo.co.uk
Internet: www.jumo.co.uk

JUMO Process Control, Inc.
6733 Myers Road
East Syracuse, NY 13057, USA
Phone: +1 315 437 5866
Fax: +1 315 437 5860
Email: info.us@jumo.net
Internet: www.jumousa.com

Stock versions

Type	Process connection	Insertion length	Material	Part no.
202822/105-62-26	Screw-in thread G 3/4 A for electrodes with insertion length = 120 mm	62 mm	Parts in contact with medium: stainless steel 1.4571	00366915
202822/105-62-87	Screw-in thread G 3/4 A for electrodes with insertion length = 120 mm	62 mm	PP	00381650
202822/106-135-26	Screw-in thread G 1 A for electrodes with insertion length = 225 mm	135 mm	Parts in contact with medium: stainless steel 1.4571	00345780
202822/106-135-87	Screw-in thread G 1 A for electrodes with insertion length = 225 mm	135 mm	PP	00375339
202822/613-48-26	Clamp connection DN 25/32/40 DIN 32676	48 mm	Parts in contact with medium: stainless steel 1.4571	00384649

Accessories

Description	Part no.
KCl reservoir, pressure-resistant, for building up an electrolyte bridge or when using KCl-filled electrodes[a], wall-mounted	00060254
Sealing set[b] **FPM** for 202822 retractable fitting	00420614
Sealing set[b] **EPDM** for 202822 retractable fitting	00706820

[a] Specify insertion length.

[b] O-Ring 25 × 2, O-Ring 16 × 2, and installation wrench.