

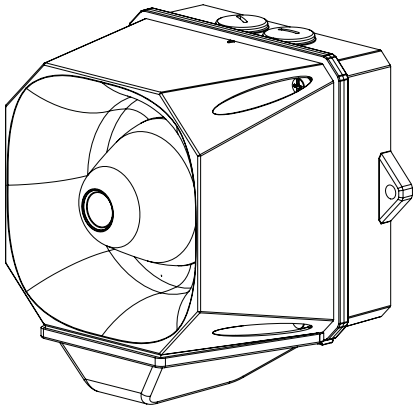

X10 Midi Sounder Beacon

The X10 Midi sounder beacon is an industrial signaling alarm, available in 4 fade resistant body colours, 6 LED beacon colours, and high and low voltage variants. It is certified to IP66 and IP69K, and verified to operate at extreme temperatures -40°C to 70°C, and is therefore suitable for use in harsh conditions where a robust industrial sounder beacon is required. The X10 Midi sounder beacon comes with an Eaton 10 year Extended Warranty and offers up to 110 dB(A) with 102 tones, and a versatile 4 stage alarm to allow you to retrofit to an existing installation.

Technical specifications

	X10 Midi Sounder Beacon			
	Low voltage DC / AC product		AC Mains product	
Rated voltage	10V - 60V DC	10V - 30V AC	115V AC	230V AC
Sounder only* (DIN Tone, High Vol)	35 - 100 mA	75 - 150 mA	69 mA	34 mA
AV* (DIN Tone, High Vol, 1Hz Flash)	45 - 200 mA	115 - 400 mA	71 mA	35 mA
Sound output	110dB			
Alarm tones	102			
Alarm stages	4			
Stage control options	+ve low voltage trigger -ve low voltage trigger +ve supply voltage trigger -ve supply voltage trigger Reverse polarity trigger		Dry /0 volt contact trigger	
Flash rate	0.5Hz (30FPM) / 1Hz (60FPM) / Continuous / Off			
Operating temperature	-40°C to +70°C			
Ingress Protection (IP) rating	IP66 and IP69K (dust ingress/high pressure water jets)			
Warranty	10 years**			
Material	UV stabilised polycarbonate ASA			
Colour - housing	Red (RAL 3001) White (RAL9003) Dark grey (RAL7012) Light grey (RAL7035)			
Colour - beacon	Red Magenta Amber Clear Blue Green			
Cable entry	Top: 2 x M20 threaded cable entries Bottom: 1 x M20 threaded cable entry			
Connecting terminals	up to 2.5mm²			
Weight	1.085kg (AC Mains); 0.800kg (Low voltage DC / AC)			

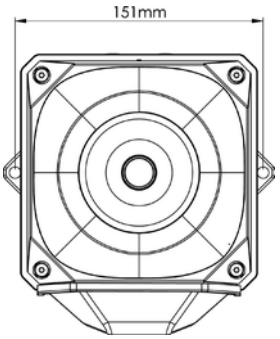

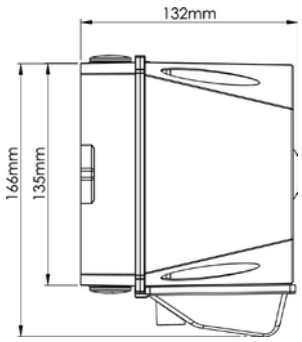

* Supply current range is based on variation of the supply voltage. A change in Tone, Volume or Beacon settings will also impact the supply current.
** Terms and Conditions apply

Key features

- Up to 110dB(A) output
- IK08 Impact resist and Dual IP Rated to IP66 and IP69K
- 10 year warranty**
- 102 tones facilitates install and retrofits accommodating a wide range of Industry requirements
- 6 lens colours available, secured by 1 single ¼ turn captive fastener
- 4 fade resistant housing colours available
- Up to 4 stage alarm, with multiple alert and control possibilities for both AC and DC variants
- Modular LED beacon capable of multiple functionality on / off; 1/2Hz (30FPM) / 1Hz (60FPM)
- Temperature range -40°c to +70°c
- Captive salt water resistant stainless steel fasteners
- M20 pre drilled threaded cable entries fitted with IP69K blanking plugs as standard
- UV stabilised polycarbonate ASA
- Low Inrush current with a range of dB(A) outputs

X10 Housing colours

Housing colours	
	R1 = Red (RAL3001)
	G1 = Dark grey (RAL7012)
	G2 = Light grey (RAL7035)
	W1 = White (RAL9003)

X10 Modular lenses

Lens colours	
	RL = Red lens
	AL = Amber lens
	BL = Blue lens
	GL = Green lens
	CL = Clear lens
	ML = Magenta lens

Catalogue numbers

Catalogue no.	Reference	Description
7092331FUL-0367	X10/CE/MDH/R1/10-60 VAC-DC	X10 midi, red housing, 10-60 VAC-DC
7092332FUL-0368	X10/CE/MDH/R1/115/230 VAC	X10 midi, red housing, 115/230 VAC
7092333FUL-0369	X10/CE/MDH/W1/10-60 VAC-DC	X10 midi, white housing, 10-60 VAC-DC
7092334FUL-0370	X10/CE/MDH/W1/115/230 VAC	X10 midi, white housing, 115/230 VAC
7092335FUL-0371	X10/CE/MDH/G1/10-60 VAC-DC	X10 midi, dark grey housing, 10-60 VAC-DC
7092336FUL-0372	X10/CE/MDH/G1/115/230 VAC	X10 midi, dark grey housing, 115/230 VAC
7092337FUL-0373	X10/CE/MDH/G2/10-60 VAC-DC	X10 midi, light grey housing, 10-60 VAC-DC
7092338FUL-0374	X10/CE/MDH/G2/115/230 VAC	X10 midi, light grey housing, 115/230 VAC
7092339FUL-0375	X10/CE/M2B/RL	X10 midi beacon, red lens
7092340FUL-0376	X10/CE/M2B/AL	X10 midi beacon, amber lens
7092341FUL-0377	X10/CE/M2B/BL	X10 midi beacon, blue lens
7092342FUL-0378	X10/CE/M2B/GL	X10 midi beacon, green lens
7092343FUL-0379	X10/CE/M2B/CL	X10 midi beacon, clear lens
7092344FUL-0380	X10/CE/M2B/ML	X10 midi beacon, magenta lens

Eaton
EMEA Headquarters
Route de la Longeraie 7
1110 Morges, Switzerland
Eaton.eu

Powering Business Worldwide

© 2018 Eaton
All Rights Reserved
Printed in EMEA
Version 2, November 2018

Eaton is a registered trademark.

All other trademarks are property of their respective owners.