RAMSES 811 top3

Item no.: 8119200

Climate control
Clock thermostats

Description

- *Available october 2023*
- Digital clock thermostat in flat design for time-dependent monitoring and control of room temperature
- Operation on device or via app
- Battery version (also for retrofitting with 2-wire connection)
- Installation in flush-mounted socket
- Direct Bluetooth Low Energy (BLE) connection between app and clock thermostat, no communication via the Internet
- Settings configured conveniently via the app with intuitive operation from a smartphone or tablet
- Increased user convenience
- 3 individually programmable weekly programs, as well as comfort, eco and setback function
- Suitable for energy-saving room temperature regulation in houses, apartments, etc.
- Illuminated display through keystroke
- External input for the flexible connection of the external room temperature sensor, floor sensor, motion detector or telephone contact
- Intelligent control algorithm (pulse-duration controller, hysteresis controller)
- Suitable for on/off heating systems, zonebased or single-room control, electric heating units



Technical data

	RAMSES 811 top3
Operating voltage	2 AA batteries
Type of contact	NO contact
Switching capacity	10 A at 250 V AC, cos φ = 1, at 250 V AC, cos φ = 0.6
Switching capacity min.	1 mA
Setting range temperature	2°C ... 30°C
Setting range frost protection	6°C ... 10°C
Temperature display	exactly 0.1 °C
Time basis	Quartz
Program	Weekly program, Daily program, Holiday program, 3 basic programs
Number of memory locations	42 , max. 24 per program
External inputs	1
Control types	Pulse width modulation, Hysteresis controller
Control period	5 – 30 min

	RAMSES 811 top3
Control capture range	±0.2 – ±5 K
Control accuracy	≤ ± 0.2 K
Mode of operation	Type 1 B as per EN 60730-1
Control types	2-point
Switching output	Potential-free, not for SELV
Suitable for SELV	Yes
Switching hysteresis	±0.2 – ±1 K
Time accuracy at 25 °C	≤ ± 1 s/day (quartz)
Power reserve	Max. 10 mins without losing time
Battery life	approx. 1 year, depending on switching frequency
Installation type	Flush-mounted wall installation
Type of protection	IP 40
Protection class	II according to EN 60 730-1

RAMSES 811 top3

Item no.: 8119200

Connection example

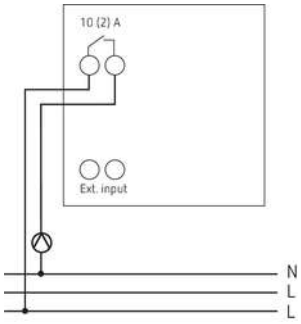

Scale drawings

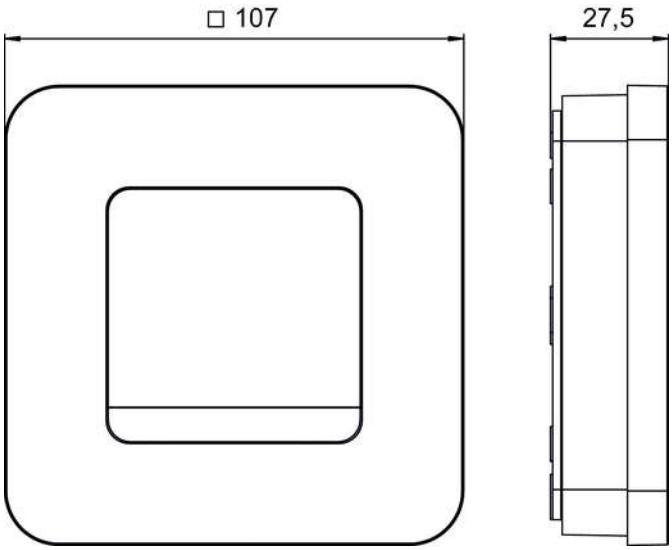

Accessories

Temperature sensor
Item no.: 9070321



Temperature sensor RAMSES IP 65
Item no.: 9070459



Actuator ALPHA 5 230 V
Item no.: 9070441



Actuator ALPHA 5 24 V
Item no.: 9070442

