IG5286

Inductive sensor

IGB3008-APOG

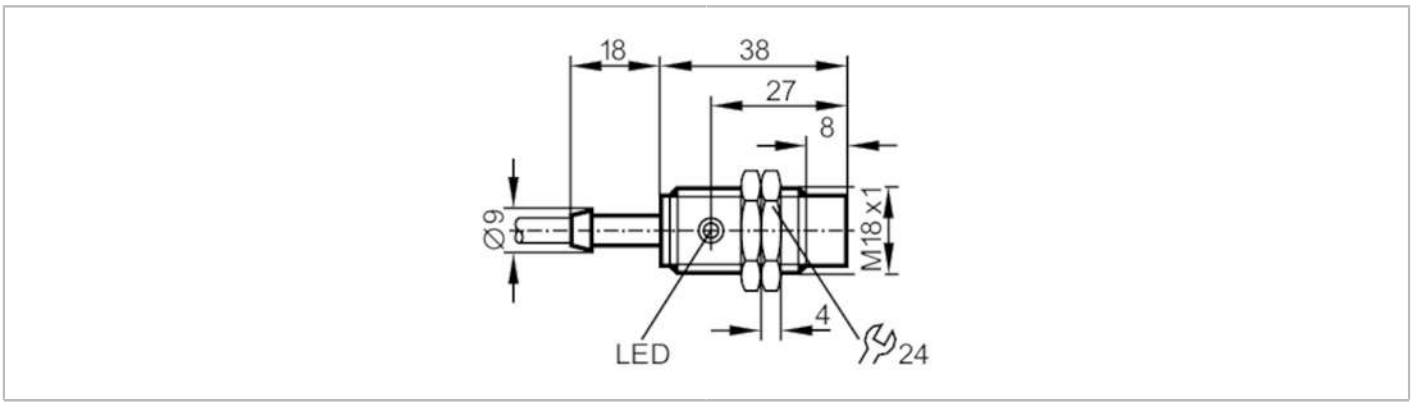

Product characteristics		
Electrical design		PNP
Output function		normally closed
Sensing range	[mm]	8
Housing		threaded type
Dimensions	[mm]	M18 x 1 / L = 38
Electrical data		
Operating voltage	[V]	18...36 DC
Current consumption	[mA]	15; (24 V)
Protection class		II
Reverse polarity protection		no
Outputs		
Electrical design		PNP
Output function		normally closed
Max. voltage drop switching output DC	[V]	2.5
Permanent current rating of switching output DC	[mA]	125; (150 (...50 °C))
Switching frequency DC	[Hz]	200
Short-circuit protection		no
Overload protection		no
Detection zone		
Sensing range	[mm]	8
Real sensing range Sr	[mm]	8 ± 10 %
Operating distance	[mm]	0...6.5
Accuracy / deviations		
Correction factor		steel: 1 / stainless steel: 0.7 / brass: 0.4 / aluminium: 0.3 / copper: 0.2
Hysteresis	[% of Sr]	1...15
Switch point drift	[% of Sr]	-10...10
Operating conditions		
Ambient temperature	[°C]	-25...80
Protection		IP 67

IG5286

Inductive sensor

IGB3008-APOG

Tests / approvals			
EMC		EN 60947-5-2	
		EN 55011	class B
MTTF	[years]	3077	
Mechanical data			
Weight	[g]	136	
Housing		threaded type	
Mounting		non-flush mountable	
Dimensions	[mm]	M18 x 1 / L = 38	
Thread designation		M18 x 1	
Materials		brass white bronze coated; PC	
Displays / operating elements			
Display		switching status	1 x LED, yellow
Accessories			
Items supplied		lock nuts: 2	
Remarks			
Pack quantity		1 pcs.	
Electrical connection			

Cable: 2 m, PVC; 3 x 0.5 mm²

Connection

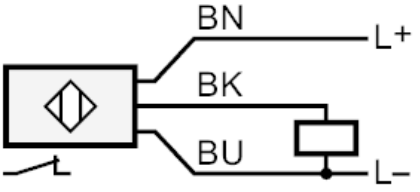

	Core colours :
BN =	brown
BU =	blue
BK =	black