87045 LIMOGES Cedex France
Telephone: (+33) 05 55 06 87 87 - Fax: (+33) 05 55 06 88 88

Hypra combined units
IP 44, 66/67-55

Catalogue number(s): 0 591 14/15 - 0 592 00/03/06/07/09/13/14/16/18/19/24/25/26/28/29/34/35/39/40/43/46/47/49/53/54/56/59/60/61/62/63/64/65/66/67/79/83/84/85/86/88/89 - 0 596 01/02/03/05/07/08/10/12/13/15/17/18/51/52/53/55/57/58/59/60/61/62/63/67/68/69/70/81/95 - 0 598 41/42/43/44/45/46/47/48/49/50/62/64/65/66/67

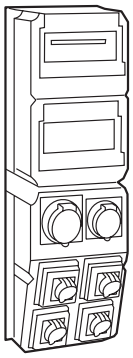

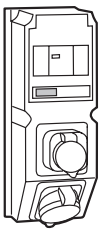



CONTENTS

Page

1. Description 1
2. Use 1
3. Range 1-3
4. Overall dimensions 4-9
5. Connection 10
6. Technical features 11-12
7. Standards and regulations 12
8. Wiring diagram 12
9. Accessories for combined units 13

1. DESCRIPTION

- Products designed to distribute power as close as possible to equipment
- Provision of several types of current (current strengths, voltages) with industrial and/or domestic pin configuration
- Supply for one or more devices
- Protection of users and circuits:
  - Connection and disconnection while de-energised using units equipped with Prisinter or interlocked socket controlled by switch
  - Protection by MCB, RCBO, RCCB, etc.
- Material: plastic
- Colour: RAL 7022
- IK: 09
- IP 44, IP 66/67-55, IP66/67

2. USE

- Cover integral with the body
- Rotary switch with double mechanical interlock
  1st interlock: the switch cannot be energised if the plug is not fully inserted
  2nd interlock: the plug cannot be removed when the switch is energised
- Markings showing switch ON and OFF positions
- Padlockable switch
- Transparent window for quick viewing of protection devices
- Numerous metric pitch cable entries (top, rear, bottom)
- Equipped with or for equipping with panel mounting sockets with standard fixing centres
- Captive stainless steel external screws
- Units can be placed side by side in the same plane

3. RANGE

3.1 Undrilled or pre-drilled units

Cat. No.	Type	D x H x W	Max. no. of sockets	No. of Lexic modules
0 598 41	Undrilled	120 x 230 x 120	2 x 16 or 32A	None
0 598 42	Undrilled	181 x 370 x 230	6 x 16 or 32A	None
0 598 43	Undrilled with window and rail	120 x 370 x 140	2 x 16 or 32A	6 *
0 598 44	Undrilled with window and rail	181 x 370 x 230	4 x 16 or 32A	9 *
0 598 45	Undrilled with window and 2 rails	181 x 740 x 230	6 x 16 or 32A	2 x 9
0 598 49	Undrilled double window and 2 rails	181 x 370 x 230	None	2 x 9
0 598 46	Pre-drilled with window and rail	173 x 470 x 160	2 x 16 or 32A	6
0 598 47	Pre-drilled with window and rail	181 x 370 x 230	4 x 16 or 32A	9
0 598 48	Pre-drilled with window and 2 rails	181 x 740 x 230	6 x 16 or 32A	2 x 9
0 598 50	Pre-drilled without window	181 x 370 x 230	6 x 16 or 32A	None

(*) Do not use RCBOs, only MCBs + RCCBs.

- IP44, IP 66/67, IP 66/67-55 according to the sockets installed
- Supplied without cable glands
- Pre-drilled units are supplied with screws and nuts for fixing panel mounting sockets with standard fixing centres
- Can be equipped with a 100 or 160 VA transformer
- Lock Cat. No. 017 66 for units with window

3. RANGE *(continued)*

3.2 Single-socket unit with MCB

			IP 44
200 to 250 V	16 A	2P + E	0 592 06
	32 A	2P + E	0 592 46
380 to 415 V	16 A	3P + E	0 592 13
		3P + N + E	0 592 18
	32 A	3P + E	0 592 53
		3P + N + E	0 592 58
	63 A	3P + E	0 592 39(1)
		3P + N + E	0 592 40(1)

(1)Wiring with a pilot wire (see § 7)

3.3 Single-socket unit with residual current protection device

			IP 44
200 to 250 V	16 A	2P + E	0 592 07(2)
	32 A	2P + E	0 592 47(2)
380 to 415 V	16 A	3P + E	0 592 14
		3P + N + E	0 592 19
	32 A	3P + E	0 592 54
		3P + N + E	0 592 59
	63 A	3P + E	0 592 79(1)

(1)Wiring with a pilot wire
(2)RCCB + MCB

3.4 Single-socket unit with switch

			IP 44	IP 66/67 - 55
100 to 130 V	16 A	2P + E	0 592 00	
200 to 250 V	16 A	2P + E	0 592 03	0 592 60
	32 A	2P + E	0 592 43	0 592 63
380 to 415 V	16 A	3P + E	0 592 09	0 592 61
		3P + N + E	0 592 16	0 592 62
	32 A	3P + E	0 592 49	0 592 64
		3P + N + E	0 592 56	0 592 65
	63 A	3P + E	0 592 34	0 592 66
		3P + N + E	0 592 35	0 592 67

3.5 Single-socket unit with switch + MCB

			IP 44	IP 66/67 - 55
100 to 130 V	16 A	2P + E		0 596 60(1)
200 to 250 V	16 A	2P + E	0 596 10	0 596 61
	32 A	2P + E	0 596 15	0 596 65
380 to 415 V	16 A	3P + E	0 596 12	0 596 62
		3P + N + E	0 596 13	0 596 63
	32 A	3P + E	0 596 17	0 596 67
		3P + N + E	0 596 18	0 596 68
	63 A	3P + E	0 592 86	0 596 69
		3P + N + E	0 592 85	0 596 70

(1)Equipped with an empty rail

3. RANGE *(continued)*

3.6 Single-socket unit with switch + RCBO

			IP 44	IP 66/67 - 55
200 to 250 V	16 A	2P + E	0 596 01	0 596 51
	32 A	2P + E	0 596 05	0 596 55
380 to 415 V	16 A	3P + E	0 596 02	0 596 52
		3P + N + E	0 596 03	0 596 53
	32 A	3P + E	0 596 07	0 596 57
		3P + N + E	0 596 08	0 596 58
	63 A	3P + E	0 592 83(2)	0 596 59(2)
		3P + N + E	0 592 84(1)	0 596 81(1)

(1)Equipped with an RCCB
(2)MCB and earth leakage module

3.7 Prisinter single-socket unit + residual current protection device

			IP 44
200 to 250 V	16 A	2P + E	0 592 24(1)
380 to 415 V	16 A	3P + E	0 592 25
		3P + N + E	0 592 26
	32 A	3P + E	0 592 28
		3P + N + E	0 592 29
	63 A	3P + E	0 592 88(2)
		3P + N + E	0 592 89(1)

(1)Equipped with an RCBO
(2)MCB and earth leakage module

3.8 125 A unit with Vistop switch

			IP 66/67 - 55
380 to 415 V	125 A	3P + E	0 591 14
		3P + N + E	0 591 15

3.9 Unit for refrigerated containers

Perishable products are transported throughout the world in refrigerated containers by land, sea and air. Hence the use of this combined unit for refrigerated containers by major transport companies (container terminals, transit hubs, railway stations, ports, airports, warehouses, transport by sea, etc.).

3P+E 32 A 440 V unit - earth pin located in "3 o'clock" position, equipped with a switch and an IP 66/67-55 socket outlet.

			IP 66/67 - 55
440 V	32 A	3P + E	0 596 95

Associated mobile products:
Plug: 0 529 46
Mobile socket:. 0 529 86

Associated fixed products:
Panel mounting socket: 0 529 26
Appliance inlet: 0 529 36

3. RANGE *(continued)*

3.10 Multi-socket unit

IP 44 unit with 2 sockets

Cat. No. 0 598 62
6 modules
2 x 16 A 2P - 20/25 V~ sockets
160 A transformer (Cat. No. 0 428 58)
2-pole 6 A MCB (Cat. No. 0 064 64 or 4 077 80)
2 x 4 A MCB (Cat. No. 1 064 63 or 4 077 79)

Cat. No. 0 598 64
9 modules
1 x 16 A 2P+E - 200/250 V~ Prisinter
1 x 16 A 3P+E - 380/415 V~ Prisinter
4-pole 25A RCCB (Cat. No. 0 086 93 or 4 016 60)
2-pole 16 A MCB (Cat. No. 0 064 68 or 4 077 84)
3-pole 16 A MCB (Cat. No. 0 064 88 or 4 078 29)

Cat. No. 0 598 65
6 modules
1 x 16 A 2P+E - 200/250 V~ IEC pin configuration socket
1 x 16 A 2P+E - 250 V~ NFC pin configuration socket with safety shutter
2 x 20 A 30 mA RCBO (Cat. No. 0 079 20 or 4 111 59)

Cat. No. 0 598 66
6 modules
Input terminal block
1 x 16 A 2P+E - 200/250 V~ IEC pin configuration socket
1 x 32 A 3P+E - 380/415 V~ socket
2-pole 16 A MCB (Cat. No. 0 064 68 or 4 077 84)
3-pole 32 A MCB (Cat. No. 0 064 91 or 4 078 32)

Cat. No. 0 598 67
6 modules
Input terminal block
1 x 16 A 2P+E - 200/250 V~ IEC pin configuration socket
1 x 32 A 3P+N+E - 380/415 V~ socket
2-pole 16 A MCB (Cat. No. 0 064 68 or 4 077 84)
4-pole 32 A MCB (Cat. No. 0 065 66 or 4 079 01)

IP 44 unit with 3 sockets

Cat. No. 0 598 61
9 modules
1 x 16 A 2P - 20/25V~ socket
1 x 16 A 2P+E - 200/250 V~ IEC pin configuration socket
1 x 16 A 2P+E - 250 V~ NFC pin configuration socket with safety shutter
2-pole 3 A MCB (Cat. No. 0 064 62 or 4 077 78)
2 x 20 A MCB (Cat. No. 0 064 69 or 4 077 85)
2 x 4 A MCB (Cat. No. 1 064 63 or 4 077 79)
2-pole 25 A RCCB (Cat. No. 0 086 28 or 4 115 04)
100 VA transformer (Cat. No. 0 427 11). Planned change to 100 VA transformer (Cat. No. 0 428 57)

IP 44 unit with 6 sockets

Cat. No. 0 598 63
2 x 9 modules
2 x 16 A 2P - 20/25 V~ sockets
1 x 16 A 2P+E - 200/250 V~ IEC pin configuration socket
2 x 16 A 2P+E - 250 V~ NFC pin configuration sockets with safety shutter
1 x 32 A 3P+E - 380/415 V~ socket
4-pole 40 A RCCB (Cat. No. 0 086 94 or 4 116 61)
2-pole 6 A MCB (Cat. No. 0 064 64 or 4 077 80)
3-pole 32 A MCB (Cat. No. 0 064 91 or 4 078 32)
2 x 20 A MCB (Cat. No. 0 064 69 or 4 077 85)
2 x 4 A MCB (Cat. No. 1 064 63 or 4 077 79)
160 VA transformer (Cat. No. 0 428 58)

3. RANGE *(continued)*

3.10 Multi-socket unit *(continued)*

IP 44 unit with 6 sockets

Cat. No. 0 598 70
2 x 9 modules
2 x 16 A 2P - 20/25 V~ sockets
1 x 16 A 2P+E - 200/250 V~ IEC pin configuration socket
2 x 16 A 2P+E - 250 V~ NFC pin configuration sockets with safety shutter
1 x 32 A 3P+N+E - 380/415V~ socket
4-pole 40 A RCCB (Cat. No. 0 086 94 or 4 116 61)
2-pole 6 A MCB (Cat. No. 0 064 64 or 4 077 80)
4-pole 32 A MCB (Cat. No. 0 065 66 or 4 079 01)
2 x 20 A MCB (Cat. No. 0 064 69 or 4 077 85)
2 x 4 A MCB (Cat. No. 1 064 63 or 4 077 79)
160 VA transformer (Cat. No. 0 428 58)

IP 66/67-55 unit with 2 sockets

Cat. No. 0 598 71
6 modules
1 x 16 A 2P+E - 200/250V~ IEC pin configuration socket
1 x 16 A 2P+E - 250 V~ NFC pin configuration socket with safety shutter
2 x 20 A 30 mA RCBO (Cat. No. 0 079 20 or 4 111 59)

Cat. No. 0 598 72
6 modules
Input terminal block
1 x 16 A 2P+E - 200/250 V~ IEC pin configuration socket
1 x 32 A 3P+E - 380/415 V~ socket
2-pole 16 A MCB (Cat. No. 064 68 or 4 077 84)
3-pole 32 A MCB (Cat. No. 064 91 or 4 078 32)

Cat. No. 0 598 73
6 modules
Input terminal block
1 x 16 A 2P+E - 200/250 V~ IEC pin configuration socket
1 x 32 A 3P+N+E - 380/415V~ socket
2-pole 16 A MCB (Cat. No. 0 064 68 or 4 077 84)
4-pole 32 A MCB (Cat. No. 0 065 66 or 4 079 01)

IP 66/67-55 unit with 3 sockets

Cat. No. 0 598 74
9 modules
1 x 16 A 2P+E - 200/250 V~ IEC pin configuration socket
1 x 16 A 2P+E - 250 V~ NFC pin configuration socket with safety shutter
1 x 32 A 3P+E - 380/415 V~ socket
3-pole 32 A MCB (Cat. No. 0 064 91 or 4 078 32)
2 x 20 A MCB (Cat. No. 0 064 69 or 4 077 85)
4-pole 63 A RCCB (Cat. No. 0 086 95 or 4 116 62)

Cat. No. 0 598 75
9 modules
1 x 16 A 2P+E - 200/250 V~ IEC pin configuration socket
1 x 16 A 2P+E - 250 V~ NFC pin configuration socket with safety shutter
1 x 16 A 3P+E - 380/415 V~ socket
3-pole 16 A MCB (Cat. No. 0 064 88 or 4 078 29)
2 x 20 A MCB (Cat. No. 0 064 69 or 4 077 85)
4-pole 40 A RCCB (Cat. No. 0 086 94 or 4 116 61)

4. OVERALL DIMENSIONS

IP 44 combined unit + switch

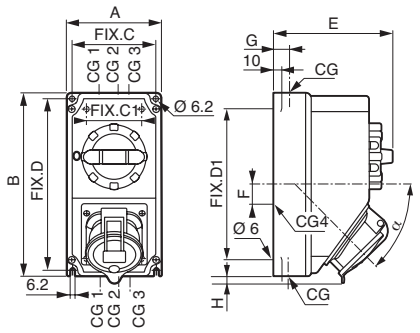

Cat. No.		A	B	C	D	C1	D1	E	F	G	H	∝	Knock-out entries for cable gland (CG) CG1	CG2	CG3	CG4
16 A																
0 592 00/03	2P+E	120	230	106	216	70	190	151	25	20	0	46	M20/ M25		M20/ M25	Ø 29
0 592 09	3P+E										0					
0 592 16	3P+N+E											1.5				
32 A																
0 592 43	2P+E	120	230	106	216	70	190	151	25	20	9	46	M20/ M25		M20/ M25	Ø 29
0 592 49	3P+E										9					
0 592 56	3P+N+E										10					
32 A																
0 592 34	3P+E	170	320	156	306	100	270	204	65	28	21.5	56	M20/ M25	M25	M20/ M32	Ø 38
0 592 35	3P+N+E															

IP 66/67-55 combined unit + switch

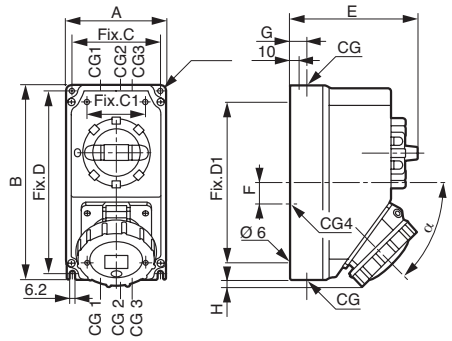

Cat. No.		A	B	C	D	C1	D1	E	F	G	H	∝	Knock-out entries for cable gland (CG) CG1	CG2	CG3	CG4
16 A																
0 592 60	2P+E	120	230	106	216	70	190	151	25	20	0	46	M20/ M25		M20/ M25	M25/ Ø 29
0 592 61	3P+E										0					
0 592 62	3P+N+E										2					
32 A																
0 592 63	2P+E	120	230	106	216	70	190	152	25	20	8	46	M20/ M25		M20/ M25	M25/ Ø 29
0 592 64	3P+E							152			8					
0 592 65	3P+N+E							152			12					
32 A																
0 592 66	3P+E	170	320	156	306	100	270	204	65	28	18	56	M20/ M25	M25/ M32	M20	M25/ M32/ Ø 38
0 592 67	3P+N+E															

IP 44 combined unit + protection device (or empty rail)

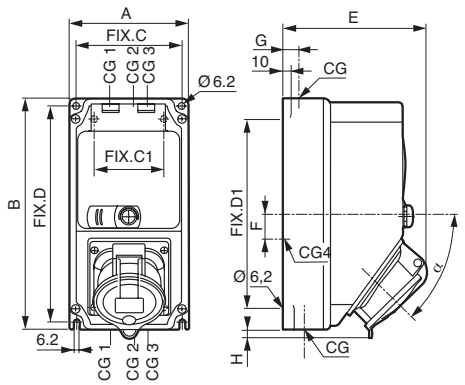

Cat. No.		A	B	C	D	C1	D1	E	F	G	H	∝	Knock-out entries for cable gland (CG) CG1	CG2	CG3	CG4
16 A																
0 592 01/02 **0 592 06/07**	2P+E	120	230	106	216	70	190	132	25	20	0	46	M20/ M25		M20/ M25	Ø 29
0 592 13/14	3P+E							134			0					
0 592 18/19	3P+N+E							138			1.5					
32 A																
0 592 46/47	2P+E	120	230	106	216	70	190	145	25	20	9	46	M20/ M25	9	M20/ M25	Ø 29
0 592 53/54	3P+E							145			9					
0 592 58/59	3P+N+E							148			10					
32 A																
0 592 39/79	3P+E	170	320	156	306	100	270	188	65	28	21.5	56	M20/ M25	M25/ M32	M20	Ø 38
0 592 40	3P+N+E															

Unit with Prisinter + protection device

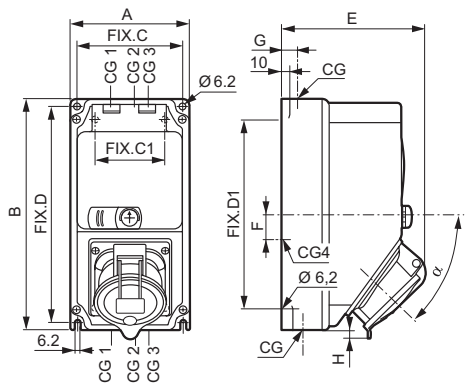

Cat. No.		A	B	C	D	C1	D1	E	F	G	H	∝	Knock-out entries for cable gland (CG) CG1	CG2	CG3	CG4
16 A																
0 592 23/24	2P+E	170	320	156	306	100	270	195	65	28	0	56	M20/ M25	M25/ M32	M20	Ø 38
0 592 25	3P+E							195			0					
0 592 26	3P+N+E							202			0					
32 A																
0 592 27	2P+E	170	320	156	306	100	270	145	65	28	0	56	M20/ M25	M25/ M32	M20	Ø 38
0 592 28	3P+E							145			0					
0 592 29	3P+N+E							148			0					
32 A																
0 592 88	3P+E	170	320	156	306	100	270	225	65	28	20	56	M20/ M25	M25/ M32	M20	Ø 38
0 592 89	3P+N+E	230	370	216	356	150	300	246	-	38	0	40	M25/ M32	M20	M25/ M32	-

4. OVERALL DIMENSIONS *(continued)*

Combined unit + isolating switch Cat. No. 0 591 14/15

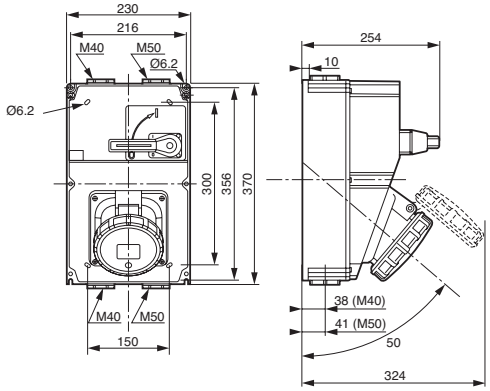

IP 44 unit with socket + switch + protection device (or empty rail)

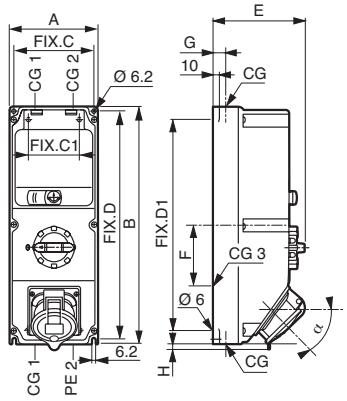

Cat. No.		A	B	C	D	C1	D1	E	F	G	H	∝	Knock-out entries for cable gland (CG) CG1	CG2	CG3
16 A															
0 596 00 **0 596 10/01**	2P+E	140	370	126	356	74	330	151	95	20	0	46	M20/ M25	M20/ M25	Ø 29
0 596 12/02	3P+E										0				
0 596 13/03	3P+N+E												1.5		
32 A															
0 596 15/05	2P+E	140	370	126	356	74	330	151	95	20	9	46	9	M20/ M25	Ø 29
0 596 17/07	3P+E												M20/ M25		
0 596 18/08	3P+N+E										10				
32 A															
0 592 86/83	3P+E	160	470	146	456	90	420	204	125	28	20	56	M25/ M32	M20/ M25	Ø 38
0 592 85/84	3P+N+E														

IP 66/67-55 unit with socket + switch + protection device (or empty rail)

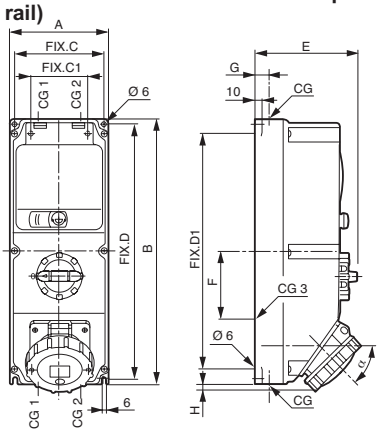

Cat. No.		A	B	C	D	C1	D1	E	F	G	H	∝	Knock-out entries for cable gland (CG) CG1	CG2	CG3
16 A															
0 596 60/50 **0 596 61/51**	2P+E	140	370	126	356	74	330	151	95	20	0	46	M20/ M25	M20/ M25	M25/ Ø 29
0 596 62/52	3P+E										0				
0 596 63/53	3P+N+E										2				
32 A															
0 596 65/55	2P+E	140	370	126	356	74	330	152	95	20	8	46	M20/ M25	M20/ M25	M25/ Ø 29
0 596 67/57	3P+E							152			8				
0 596 68/58	3P+N+E							156			12				
32 A															
0 596 69/59	3P+E	160	470	146	456	90	420	204	125	28	17	56	M25/ M32	M20/ M25	M25/ M32/ Ø 38
0 596 70/81	3P+N+E														

Hypra combined units
IP 44, 66/67-55

4. OVERALL DIMENSIONS *(continued)*

Wired multi-socket units														Knockout cable entries for PG or ISO			
IP 44																	
Cat. No.	**A**	**B**	**Fix. C**	**Fix. C1**	**Fix. D**	**Fix. D1**	**E**	**F**	**G**	**H**	**I**	**J1**	**J2**	**K**	**CG1**	**CG2**	**CG3**	**CG4**
0 598 65	140	370	126	74	356	330	120	132	155	20	95	10°	46°	0	ISO 20/25	-	ISO 20/25	Ø 28
0 598 66														7.5				
0 598 67														9.5				
0 598 62	160	470	146	90	456	420	173	185	213	28	140	20°	56°	3.5	ISO 20/25	-	ISO 20/25	Ø 28/37
IP 66/67 - 55																		
0 598 71	140	370	126	74	356	330	120	132	158	20	95	10°	36°	18.5	ISO 20/25	-	ISO 20/25	-
0 598 72													46°	16.5				
0 598 73													46°	20				

Generic drawing of unit with 2 sockets

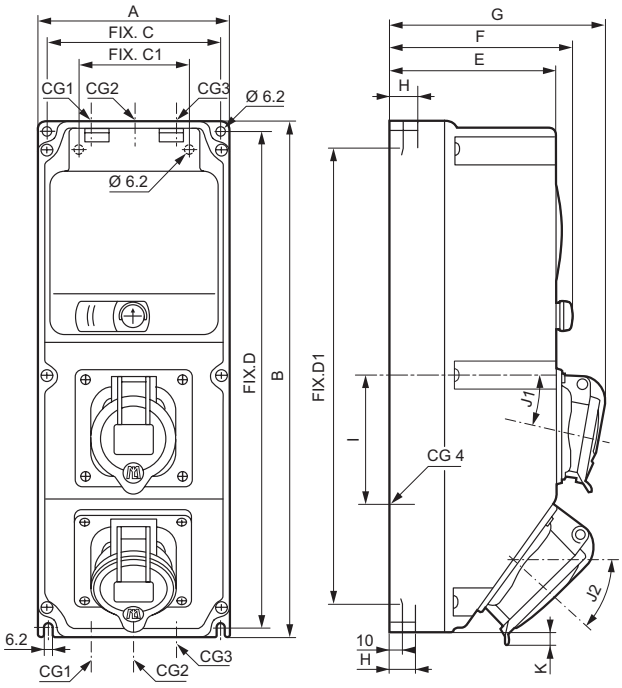

Details of units with two sockets

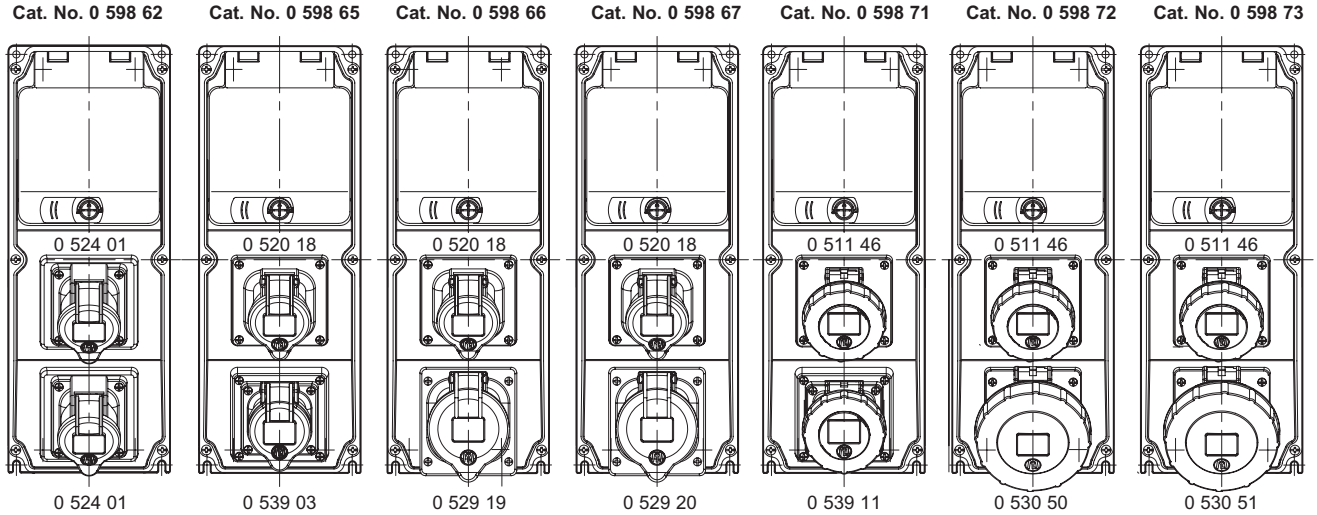

4. OVERALL DIMENSIONS *(continued)*

Cat. No. 0 598 64

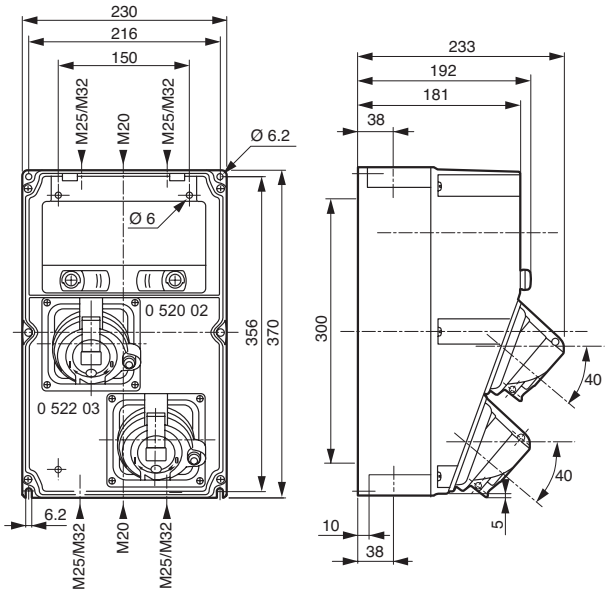

Unit with 3 sockets
Cat. No. 0 598 61

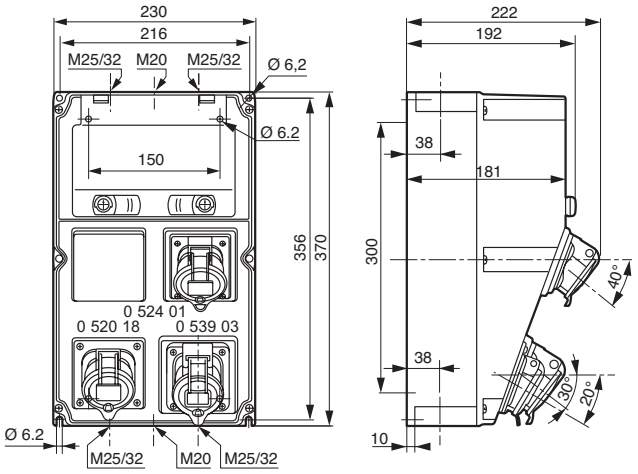

4. OVERALL DIMENSIONS *(continued)*

Cat. No. 0 598 74

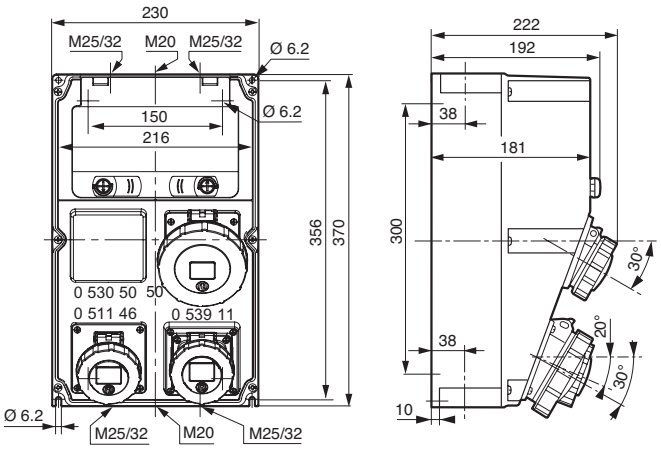

Cat. No. 0 598 75

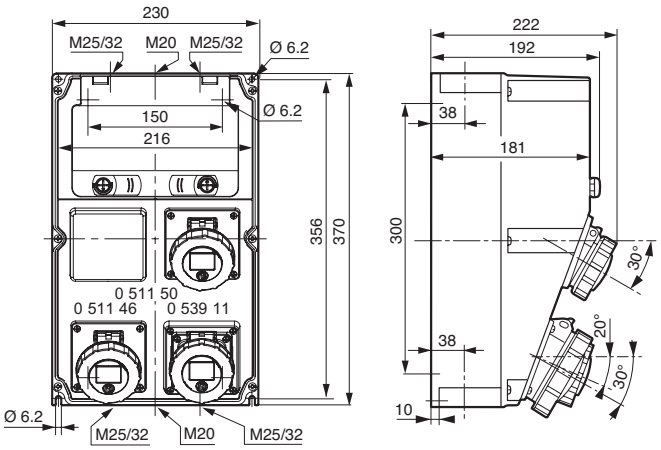

4. OVERALL DIMENSIONS *(continued)*

Cat. No. 0 598 63

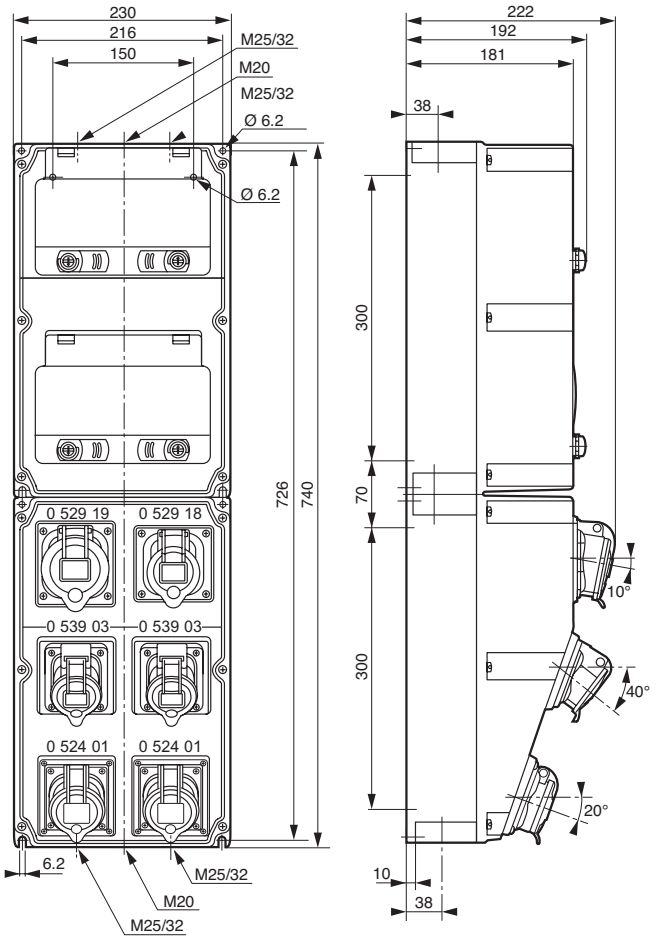

4. OVERALL DIMENSIONS *(continued)*

Cat. No. 0 598 70

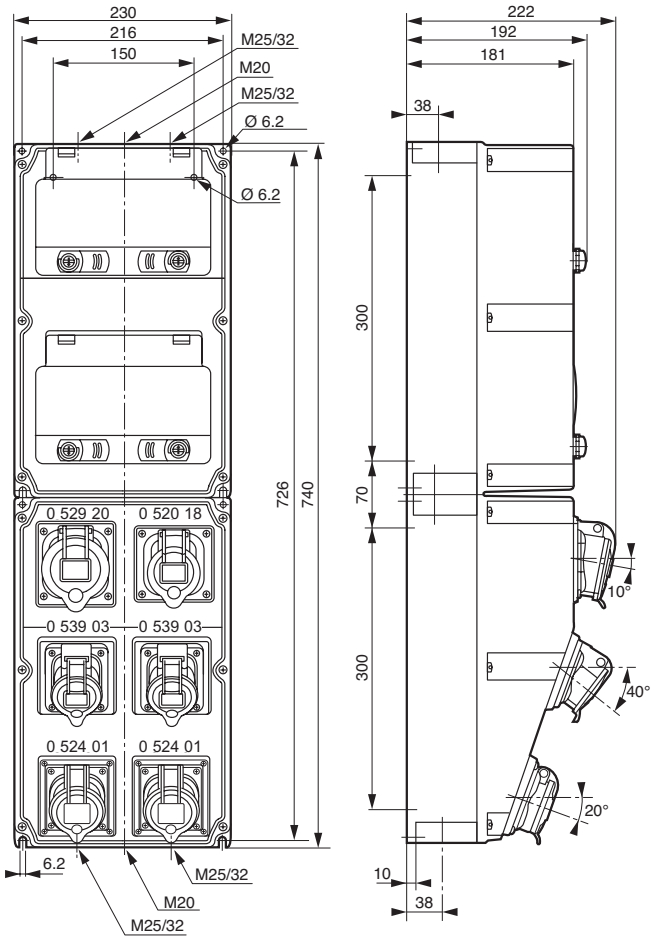

Undrilled units

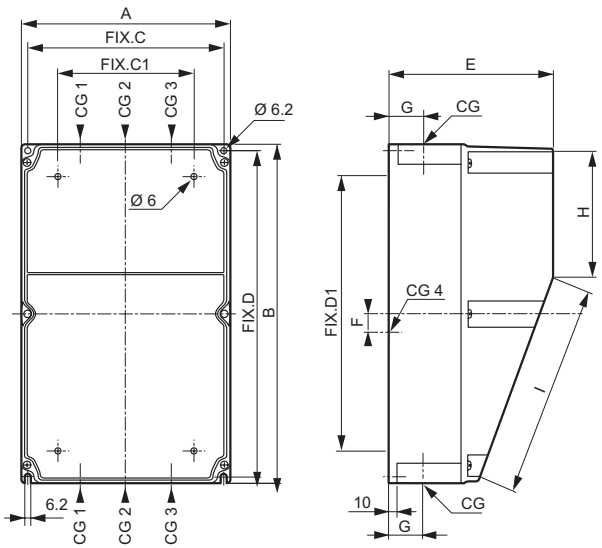

Cat. No.	A	B	C	C1	D	D1	E	F	G	H	I	CG1	CG2	CG3	CG4
0 598 41	120	230	106	70	216	190	120	25	20	110	90	M20/M25	-	M20/M25	M25
0 598 42	230	370	216	150	356	300	181	-	38	120	220	M25/M32	M20	M25/M32	-
0 598 43	140	370	126	74	356	330	120	95	20	264	105	M20/M25	-	M20/M25	M25
0 598 44	230	370	216	150	356	300	181	-	38	120	220	M25/M32	M20	M25/M32	-
0 598 45	230	740	216	150	726	670	181	-	38	120	220	M25/M32	M20	M25/M32	-

4. OVERALL DIMENSIONS *(continued)*

Pre-drilled unit - Cat. No. 0 598 46

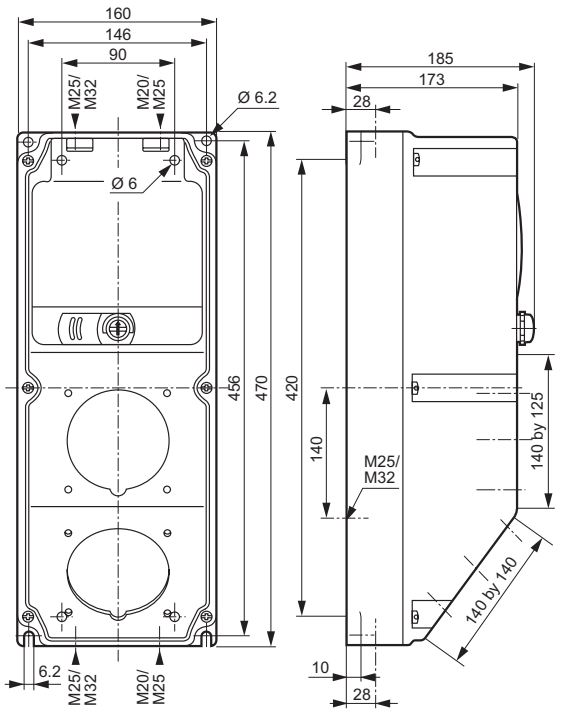

Pre-drilled unit - Cat. No. 0 598 47

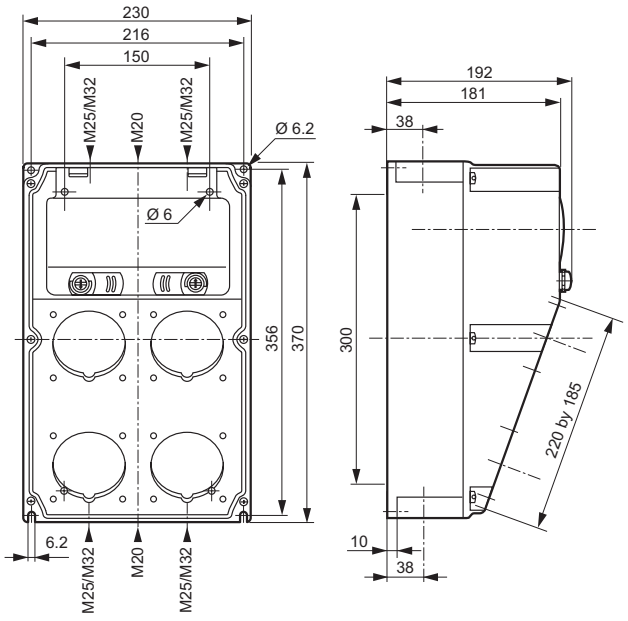

4. OVERALL DIMENSIONS *(continued)*

Pre-drilled unit - Cat. No. 0 598 48

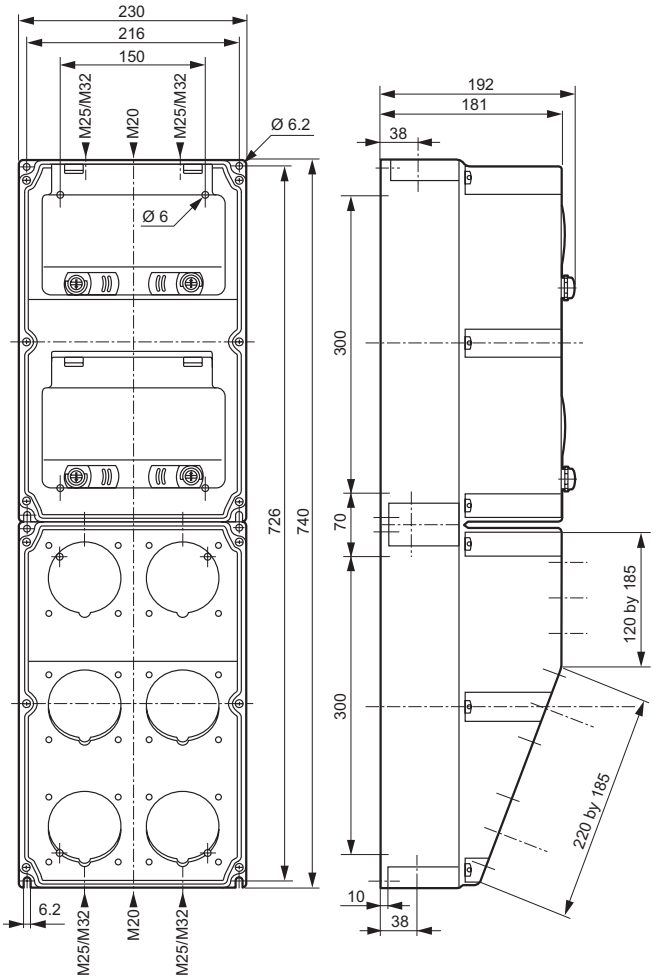

Pre-drilled unit - Cat. No. 0 598 50

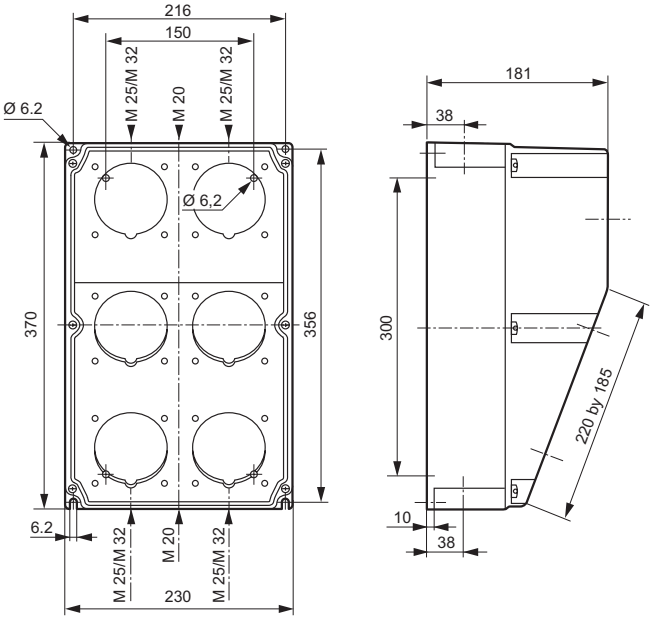

5. CONNECTION AND PROTECTION DEVICES

5.1 Connection of socket outlets

Cross-section of the cables inside the unit according to the current used:

- 16 A socket: . . . . . 2.5 mm^2
- 32 A socket: . . . . . 6 mm^2
- 63 A socket: . . . . . 16 mm^2
- ELV socket: . . . . . 2.5 mm^2 at the primary
  . . . . . 2.5 mm^2 at the secondary

NB: Wiring with pilot wire (see § 8):

The pilot wire is a control conductor associated with the power conductor.
Its interruption controls breaking of the power circuit via a contactor. This is an arrangement which provides an electrical response to the obligation to break circuits above 32 A (decree of 14/11/88). An additional (shorter) pin is therefore added to the various socket models to provide this “pilot wire” function.

5.2 Connection of protection devices

Copper cable	rigid	flexible
• DNX^3 and DX^3 PH + N, with or without RCD	16	10
• DX^3 4500 - 6 kA DX^3 6000 - 10 kA DX^3 10000 - 16 kA ≤ 63 A and add-on earth leakage modules ≤ 63 A	35	25
• DX^3 10000 - 16 kA 80 to 125 A	70	50
• DX^3 25 kA ≥ 32 A (C curve) ≥ 16 A (D curve) DX^3 36 kA, DX^3 50 kA and add-on earth leakage modules	50	35
Auxiliaries	2.5	2.5
Auto. terminals connection cross-section • DNX^3 and DX^3 Ph + N	4	4

5.3 Types of protection device and number of modules

Upstream, Hypra equipped units or those to be equipped can integrate various types of modular protection device, depending on the catalogue number:

- MCB
- RCBO
- RCCB

NB: it is important to check, according to the required use, that protection against indirect contact (RCDs) and against overloads and short-circuits (MCBs) are both provided.

Caution: an RCCB does not provide protection against overloads and short-circuits.

Short-circuit resistance: for the short-circuit resistance of the modular circuit breakers (MCBs), RCBOs and RCCBs, refer to the performance pages for these products in the current Legrand catalogue.

Ratings for units equipped with RCCBs

Ratings	Sensitivity
- 16 A ..... 25 A RCCB - 32 A ..... 40 A RCCB - 63 A ..... 63 A RCCB	30 mA

5. CONNECTION AND PROTECTION *(continued)*

5.3 Types of protection device and number of modules *(continued)*

Details of the type of protection device and number of modules per single-socket unit.

HYPRA unit Cat. No.	Type of protection device	Cat. No.		Max. no. of modules
		MCB	earth leakage mod.	
0 592 06	MCB	4 077 84		5
0 592 07	RCCB + MCB	4 115 04	4 077 84	5
0 592 13	MCB	4 078 29		5
0 592 14	RCBO	4 111 86		5
0 592 18	MCB	4 078 98		5
0 592 19	RCBO	4 111 86		5
0 592 24	RCBO	4 111 58		6
0 592 25	RCBO	4 111 86		6
0 592 26	RCBO	4 111 86		6
0 592 28	RCBO	4 111 89		6
0 592 29	RCBO	4 111 89		6
0 592 39	MCB	4 078 35		6
0 592 40	MCB	4 079 04		6
0 592 46	MCB	4 077 87		5
0 592 47	RCCB + MCB	4 115 05	4 077 87	5
0 592 53	MCB	4 078 32		5
0 592 54	RCBO	4 111 89		5
0 592 58	MCB	4 079 01		5
0 592 59	RCBO	4 111 89		5
0 592 83	MCB + earth leakage mod.	4 078 35	4 104 72	6
0 592 84	RCCB	4 116 62		6
0 592 85	MCB	4 079 04		6
0 592 86	MCB	4 078 35		6
0 592 88	MCB + earth leakage mod.	4 078 35	4 104 72	6
0 592 89	RCCB + MCB	4 116 62	4 079 04	9
0 596 01	RCBO	4 111 58		6
0 596 02	RCBO	4 111 86		6
0 596 03	RCBO	4 111 86		6
0 596 05	RCBO	4 111 61		6
0 596 07	RCBO	4 111 89		6
0 596 08	RCBO	4 111 89		6
0 596 10	MCB	4 077 84		6
0 596 12	MCB	4 078 29		6
0 596 13	MCB	4 078 98		6
0 596 15	MCB	4 077 87		6
0 596 17	MCB	4 078 32		6
0 596 18	MCB	4 079 01		6
0 596 51	RCBO	4 111 58		6
0 596 52	RCBO	4 111 86		6
0 596 53	RCBO	4 111 86		6
0 596 55	RCBO	4 111 61		6
0 596 57	RCBO	4 111 89		6
0 596 58	RCBO	4 111 89		6
0 596 59	MCB + earth leakage mod.	4 078 35	4 104 72	6
0 596 60		-		6
0 596 61	MCB	4 077 84		6
0 596 62	MCB	4 078 29		6
0 596 63	MCB	4 080 16		6
0 596 65	MCB	4 077 87		6
0 596 67	MCB	4 078 32		6
0 586 68	MCB	4 079 01		6
0 586 69	MCB	4 078 35		6
0 596 70	MCB	4 079 04		6
0 596 81	RCCB	4 116 62		6

6. TECHNICAL FEATURES

Tests

6.1 Glow wire test
Housing: 650°C
Live parts: 850°C

6.2 Dielectric strength
2500 V if equipped with IEC sockets
2000 V if equipped with NFC sockets

6.3 Usage temperature
- With mechanical interlock only: - 20°C/+ 100°C
- Equipped with RCCB: - 15°C/+ 40°C
- Equipped with MCB: - 15°C/+ 40°C
- Equipped with RCBO: - 5°C/+ 40°C

Derating of circuit breakers according to the ambient temperature:
A standard circuit breaker is set to operate at In at an ambient temperature of 30°C.
Its nominal features are modified according to the ambient temperature in the unit in which the circuit breaker is located.

For example: temperature derating table for DX³ 6000 A/10 kA circuit breakers (Cat. No. 4 077 84)

	Ambient Temperature/In									
In (A)	- 25°C	- 10°C	0	10°C	20°C	30°C	40°C	50°C	60°C	70°C
0.5 A	0.62	0.6	0.57	0.55	0.52	0.5	0.47	0.42	0.40	0.38
1 A	1.5	1.4	1.3	1.2	1.1	1	0.9	0.8	0.7	0.6
1.5 A	1.9	1.8	1.7	1.7	1.6	1.5	1.5	1.4	1.4	1.3
2 A	2.8	2.6	2.5	2.3	2.2	2	2	1.9	1.8	1.7
3 A	3.8	3.6	3.5	3.3	3.2	3	2.9	2.8	2.7	2.6
3.5 A	4.5	4.2	4.0	3.9	3.7	3.5	3.4	3.3	3.2	3.1
5 A	6.4	6.0	5.8	5.5	5.3	5.0	4.8	4.7	4.5	4.6
6 A	7.5	7.0	6.6	6.4	6.2	6.0	5.8	5.6	5.4	5.3
10 A	12.5	11.5	11.1	10.7	10.3	10.0	9.7	9.3	9.0	8.7
13 A	16.3	15.0	14.3	13.9	13.4	13.0	12.6	12.1	11.7	11.3
16 A	20.0	18.7	18.0	17.3	16.6	16.0	15.4	14.7	14.1	13.5
20 A	25.0	23.2	22.4	21.6	20.8	20.0	19.2	18.4	17.6	16.8
25 A	31.5	29.5	28.3	27.2	26.0	25.0	24.0	22.7	21.7	20.7
30 A	38.3	36.0	34.5	33.0	31.5	30.0	28.8	27.3	26.1	24.9
32 A	41.0	37.8	36.5	34.9	33.3	32.0	30.7	29.1	27.8	26.5
40 A	51.0	48.0	46.0	44.0	42.0	40.0	38.0	36.0	34.0	32.0
50 A	64.0	60.0	57.5	55.0	52.5	50.0	47.5	45.0	42.5	40.0
63 A	80.6	75.6	72.5	69.9	66.1	63.0	59.8	56.1	52.9	49.7

6. TECHNICAL FEATURES *(continued)*

6.4. Resistance to chemicals

Chemicals	Plastic
Acetaldehyde	++++
Acetic acid	- -
Ammonia 10%	++++
Benzene	++++
Benzol	- -
Bleach	-
Bromine	- -
Butanol	+++
Carbon tetrachloride	- -
Chloroform	++++
Chromic acid 50%	- -
Citric acid	++++
Cream	++++
Cresols	- -
Diesel oils (20, 30, 40, 50)	++++
Distilled water	++++
Domestic fuel oil	++++
Dry chlorine	- -
Ethanol	++++
Ether	++++
Ethyl acetate	++++
Formic acid	- -
Fruit juice	++++
Fuel oil	++++
Glucose	++++
Glycerine	++++
Heptane	++++
Hydraulic oils	++++
Hylene	++++
Kerosene	++++
Lactic acid	+++
Lard	++++
Lime	++++
Liquid propane	++++
Lubricating oils (1, 2, 3, 5A, 5B, 6)	++++
Methanol	+++
Molasses	++++
Nitric acid 20%	- -
Nitrobenzene	+++
Olive oil	++++
Paraffin	++++
Perchloric acid	- -
Petroleum	++++
Phenol 10%	- -
Potassium bicarbonate	++++
Potassium chlorate	-
Potassium permanganate	- -
Salt water	++++
Seawater	++++
Silicone	++++
Silver nitrate	++++
Sodium bicarbonate	++++
Sodium chlorate	- -
Sulphuric acid <10%	-
Toluene	++++
Turpentine	+++
Uric acid	++++
Vinyl chloride	++++
Whisky and wine	++++
Zinc chloride	++++
Zinc sulphate	++++

++++ : Excellent resistance
+++ : Good resistance
- : Limited resistance
- - : Poor resistance

6. TECHNICAL FEATURES *(continued)*

6.5 UV resistance

No change of colour or deterioration of the material according to the test described below:
Duration of the test: 168 hours
Infrared and ultraviolet filter to be as similar as possible to the solar spectrum

6.6 Ageing test

No change of colour or deterioration of the material according to the test described below: 7 days at + 80°C

6.7 Resistance to harsh environments (IP66/67 - 55)

Resistance to industrial cleaning procedures:
high pressure pre-wash/wash with detergent/high pressure - high temperature wash
The other settings are identical to those of the degreasing pre-wash test.

Result: all the products tested have successfully passed the tests with detergents according to the specifications given above.

➜ *Degreasing pre-wash test:* test conducted with a high pressure device set between 70 and 90 bars.

Hot water between 70 and 80°C.

Spraying from a distance of 50 cm for one minute with no direct application on the product being tested.

➜ *Cleaning with detergent:* two detergents are applied: Galorox acid and Galorox 3%.
Each detergent is sprayed all round the product for 10 seconds.
The detergent is then left to take effect for 30 minutes.

➜ *Wash:* high pressure device set between 110 and 120 bars.
Spraying of hot water between 70 and 80°C.
The other settings are identical to those of the degreasing pre-wash test.

Result: all the products tested have successfully passed the tests with detergents according to the specifications given above.

7. STANDARDS AND REGULATIONS

- IEC 60 309.1 and NF EN 60 309.1 (design rules)
- IEC 60 309.2 and NF EN 60 309.2 (dimensional interchangeability requirements)
- NF EN 60 439.1 (rules for combined units)
- IEC 62 262 and NF EN 62 262 (IK)
- IEC 60 529 and NF EN 60 529 (IP)
- Decree of 14/11/88 (safety of workers)

8. WIRING DIAGRAM

8.1 Example of diagram with pilot wire (0 592 39/40/79)

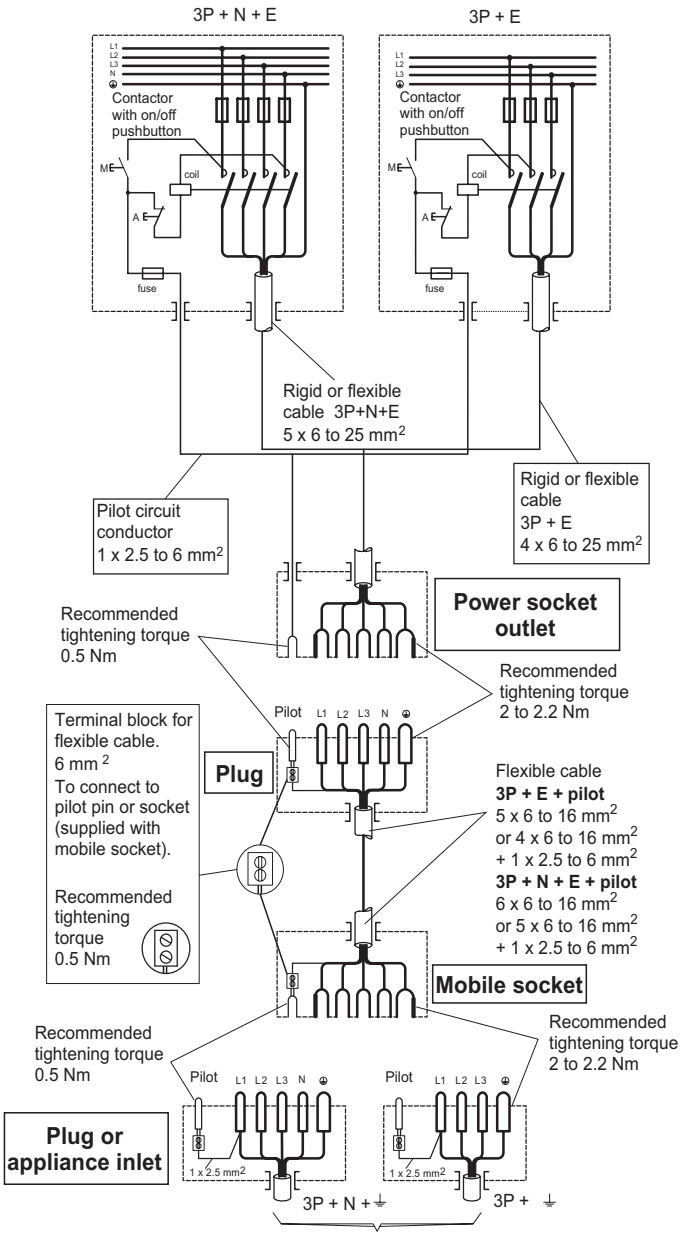

9. ACCESSORIES FOR COMBINED UNITS

For fast, adaptable installation, create your unit to suit your own specific requirements, combining panel mounting sockets (with standard fixing centres) with pre-drilled units and accessories on undrilled or pre-drilled units.

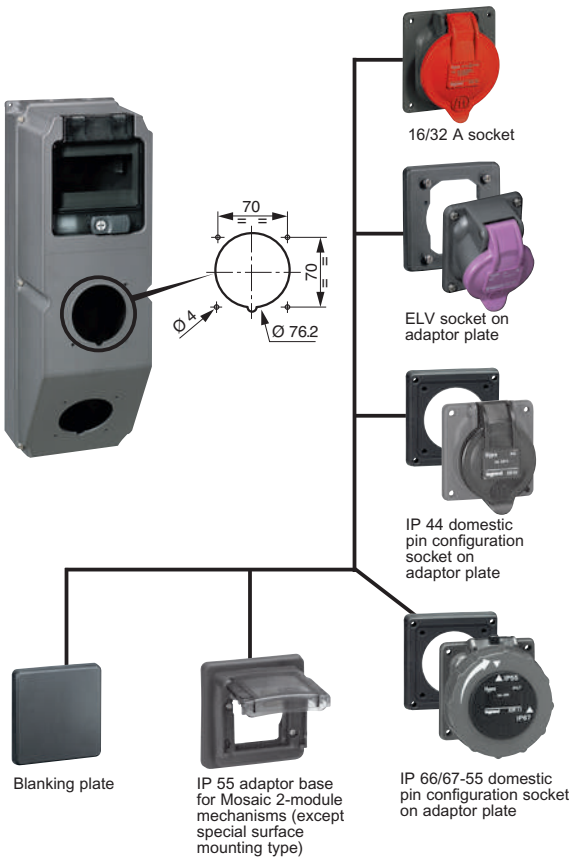



Cat. No. **0 521 18**

Adaptor plate for IP 44 and IP 66/67-55 domestic sockets



Cat. No. **0 521 19**

Adaptor plate for ELV sockets



Cat. No. **0 521 24**

Blanking plate



Cat. No. **0 539 49**

IP 55 adaptor base for Mosaic mechanisms (except surface mounting type)



Cat. No. **0 017 66**

850 key lock



Cat. No. **0 521 95**

Bag of screws and nuts

Cat. No. 0 521 18

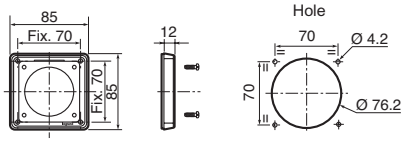

Cat. No. 0 521 19

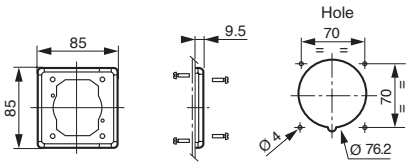

Cat. No. 0 539 49

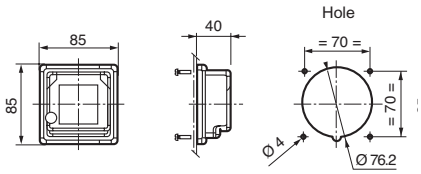

Dimensions of panel mounting sockets (70 x 70)

IP 44 panel mounting socket

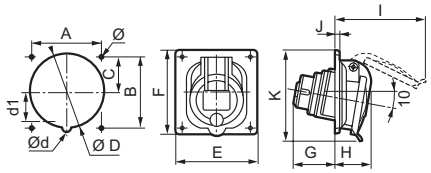

	Weight (kg)	A	B	C	Ø D	Ø d	d1	E	F	G	H	I	J	K	Ø
16 A															
2 P + ⏚	0.110	70	70	35	76.2	-	-	84	84	37	36	89	4.5	88	4.2
3 P + ⏚	0.140	70	70	35	76.2	-	-	84	84	43	36	97	4.5	89	4.2
3 P + N + ⏚	0.165	70	70	35	76.2	-	-	84	84	43	37	106	4.5	91	4.2
32 A															
2 P + ⏚	0.220	70	70	35	76.2	-	-	84	94	54	45	117	4.5	100	4.2
3 P + ⏚	0.220	70	70	35	76.2	-	-	84	94	54	45	117	4.5	100	4.2
3 P + N + ⏚	0.255	70	70	35	76.2	8	36	84	94	54	46	125	4.5	102	4.2

IP 66/67-55 panel mounting socket

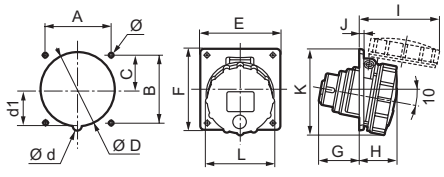

	Weight (kg)	A	B	C	Ø D	Ø d	d1	E	F	G	H	I	J	K	L	Ø
16 A																
2 P + ⏚	0.140	70	70	35	76.2	-	-	84	84	42	39	83	4.5	90	72.5	4.2
3 P + ⏚	0.165	70	70	35	76.2	-	-	84	84	43	41	98	4.5	93	81	4.2
3 P + N + ⏚	0.195	70	70	35	76.2	-	-	84	84	43	41	99	4.5	91	86.5	4.2
32 A																
2 P + ⏚	0.240	70	70	35	76.2	-	-	84	94	54	50	113	4.5	101	94.5	4.2
3 P + ⏚	0.240	70	70	35	76.2	-	-	84	94	54	50	113	4.5	101	94.5	4.2
3 P + N + ⏚	0.270	70	70	35	76.2	8	36	84	94	54	51	120	4.5	103	101	4.2