NU 205 ECP

Popular item
SKF Explorer

Dimensions

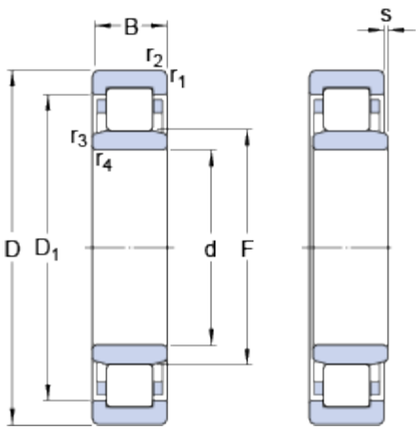

d		25	mm
D		52	mm
B		15	mm
D_1	≈	43.3	mm
F		31.5	mm
$r_{1,2}$	min.	1	mm
$r_{3,4}$	min.	0.6	mm
s	max.	1.3	mm

Abutment dimensions

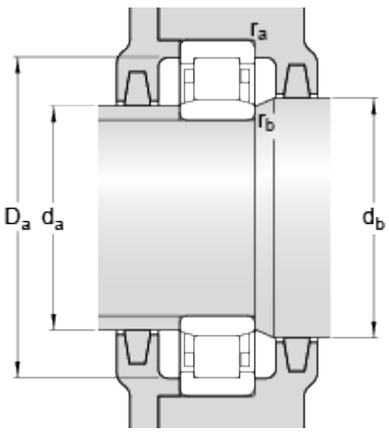

d_a	min.	28.9	mm
d_a	max.	30.4	mm
d_b	min.	33	mm
D_a	max.	46.4	mm
r_a	max.	1	mm
r_b	max.	0.6	mm

Calculation data

Basic dynamic load rating	C	32.5	kN
Basic static load rating	C_0	27	kN
Fatigue load limit	P_u	3.35	kN
Reference speed		15000	r/min
Limiting speed		16000	r/min
Calculation factor	k_r	0.15	
Limiting value	e	0.2	
Axial load factor	Y	0.6	

Mass

Mass bearing	0.13	kg

Associated products

Angle ring	HJ 205 EC