Product Data Sheet

22mm Equal Elbow Connector

John Guest



Applications	
Drinks Dispense	✓
Pure Water	✓
Pneumatics	✓

The John Guest 22mm Equal Elbow Connector has been developed to satisfy the compatibility needs of a wide range of applications.

Working Temperatures and Pressures

Potable Liquids and Air 10 Bar at 1°C 10 Bar at 23°C 7 Bar at 70°C

Air 10 Bar at -20°C

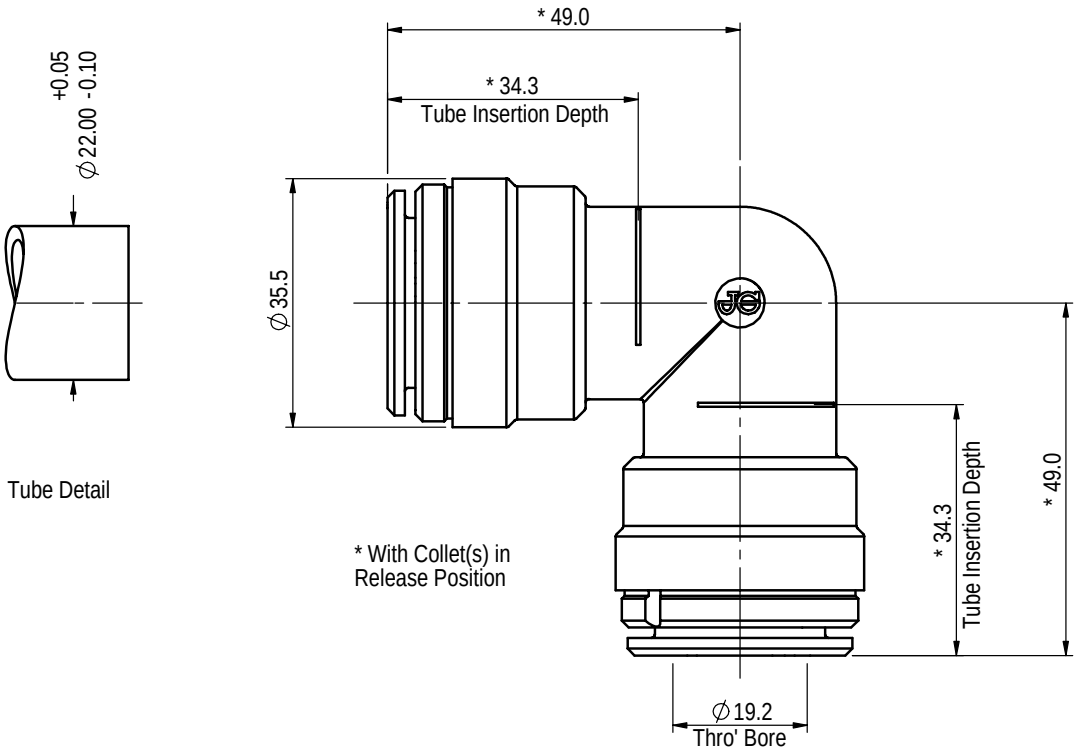

Part Description	Material
Body	Acetal Co-Polymer (Unfilled), Black
Collets	Acetal Co-Polymer (Unfilled), Black / Stainless Steel
'O' Rings	Nitrile, Black

All Dimensions in mm

THE COPYRIGHT IN THIS DRAWING AND THE PRODUCTS REFERRED THEREON BELONG TO JOHN GUEST INTERNATIONAL LIMITED AND THIS DRAWING NOR THE INFORMATION CONTAINED HEREIN SHALL BE PRODUCED IN ANY FORM OR USED FOR ANY PURPOSE WITHOUT WRITTEN CONSENT © 2007

The company has a policy of continuous research and development and reserves the right to amend without notice the specification and design of all products illustrated. For details of terms and conditions and any other technical enquiries, please contact our Customer Services Department.

ISSUE 1 SMD 02-05-07

DS-PM0322E

Location: CCL-SA-SPE01
File: DS-PM0322E[1][C].pdf
Release Number: 071822-C-M088
CURRENT PRODUCTION
User: roses
Printed/Downloaded: 27 Nov 14,13:46
UNCONTROLLED IF PRINTED OR DOWNLOADED