PN2293

Pressure sensor with display

PN-025-REN14-MFRKG/US/ /V

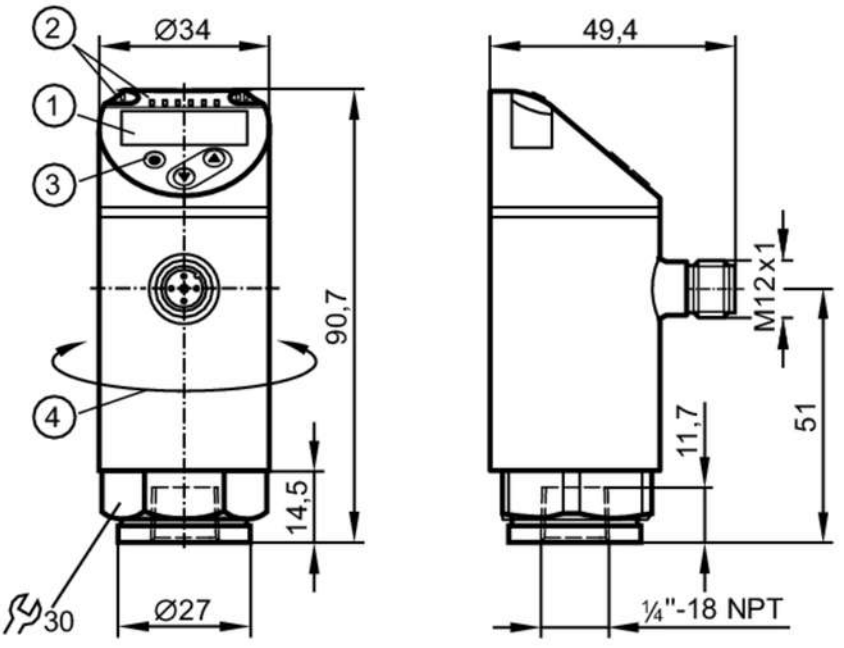

1 alphanumeric display 4-digit red/green
2 LEDs Display unit / switching status
3 programming button
4 upper part of the housing can be rotated 345°

Product characteristics			
Number of inputs and outputs	Number of digital outputs: 2; Number of analogue outputs: 1		
Measuring range	-1...25 bar	-14.5...362.5 psi	-0.1...2.5 MPa
Process connection	threaded connection 1/4" NPT internal thread		
Application			
Special feature	Gold-plated contacts		
Measuring element	ceramic-capacitive pressure measuring cell		
Application	for industrial applications		
Media	liquids and gases		
Medium temperature [°C]	-25...80		
Min. bursting pressure	350 bar	5075 psi	35 MPa
Pressure rating	150 bar	2175 psi	15 MPa
Vacuum resistance	-1000 mbar	-0.1 MPa	
Type of pressure	relative pressure; vacuum		
MAWP (for applications according to CRN)	70 bar	1015 psi	7 MPa
Electrical data			
Operating voltage [V]	18...30 DC; (to SELV/PELV)		
Current consumption [mA]	< 35		
Min. insulation resistance [MΩ]	100; (500 V DC)		
Protection class	III		

PN2293

Pressure sensor with display

PN-025-REN14-MFRKG/US/ /V

Reverse polarity protection		yes		
Power-on delay time	[s]	0.3		
Integrated watchdog		yes		
Inputs / outputs				
Number of inputs and outputs		Number of digital outputs: 2; Number of analogue outputs: 1		
Outputs				
Total number of outputs		2		
Output signal		switching signal; analogue signal; IO-Link; (configurable)		
Electrical design		PNP/NPN		
Number of digital outputs		2		
Output function		normally open / normally closed; (parameterisable)		
Max. voltage drop switching output DC	[V]	2		
Permanent current rating of switching output DC	[mA]	250		
Switching frequency DC	[Hz]	< 500		
Number of analogue outputs		1		
Analogue current output	[mA]	4...20; (scalable 1:5)		
Max. load	[Ω]	500		
Analogue voltage output	[V]	0...10; (scalable 1:5)		
Min. load resistance	[Ω]	2000		
Short-circuit protection		yes		
Type of short-circuit protection		pulsed		
Overload protection		yes		
Measuring/setting range				
Measuring range		-1...25 bar	-14.5...362.5 psi	-0.1...2.5 MPa
Analogue start point		-1...20 bar	-14.5...290 psi	-0.1...2 MPa
Analogue end point		4...25 bar	58...362.5 psi	0.4...2.5 MPa
Factory setting / CMPT = 2				
Set point SP		-0.85...25 bar	-12...362.5 psi	-0.085...2.5 MPa
Reset point rP		-0.95...24.9 bar	-13.5...361 psi	-0.095...2.49 MPa
Min. difference between SP and rP		0.15 bar	1.5 psi	0.015 MPa
In steps of		0.05 bar	0.5 psi	0.005 MPa
Status_B High Resolution / CMPT = 3				
Set point SP		-0.84...25 bar	-12.2...362.6 psi	-0.084...2.5 MPa
Reset point rP		-0.95...24.9 bar	-13.7...361.1 psi	-0.095...2.49 MPa
Min. difference between SP and rP		0.11 bar	1.5 psi	0.011 MPa
In steps of		0.01 bar	0.1 psi	0.001 MPa
Accuracy / deviations				
Switch point accuracy	[% of the span]	< ± 0,4; (Turn down 1:1)		
Repeatability	[% of the span]	< ± 0,1; (with temperature fluctuations < 10 K; Turn down 1:1)		
Characteristics deviation		< ± 0,25 (BFSL) / < ± 0,5 (LS); (Turn down 1:1; BFSL = Best Fit Straight Line; LS = limit value setting)		

PN2293

Pressure sensor with display

PN-025-REN14-MFRKG/US/ /V

[% of the span]		
Hysteresis deviation [% of the span]		< ± 0,1; (Turn down 1:1)
Long-term stability [% of the span]		< ± 0,05; (Turn down 1:1; per 6 months)
Temperature coefficient zero point [% of the span / 10 K]		< ± 0,2; (-0...80 °C)
Temperature coefficient span [% of the span / 10 K]		< ± 0,2; (-0...80 °C)
Notes on the accuracy / deviation		switch point accuracy, linearity error under DNV GL: < ± 1%: < ± 1%
Response times		
Response time [ms]		< 1.5
Delay time programmable dS, dr [s]		0...50
Damping process value dAP [s]		0...4
Damping for the analogue output dAA [s]		0...4
Max. response time analogue output [ms]		3
Software / programming		
Parameter setting options		hysteresis / window; normally open / normally closed; switch-on/ switch-off delay; Damping; Display unit; current/voltage output
Interfaces		
Communication interface		IO-Link
Transmission type		COM2 (38,4 kBaud)
IO-Link revision		1.1
SDCI standard		IEC 61131-9
SIO mode		yes
Required master port type		A; (when pin 2 not connected: B)
Supported DeviceIDs	**Type of operation**	**DeviceID**
	Factory setting / CMPT = 2	472
	Status_B High Resolution / CMPT = 3	988
Note		For further information please see the IODD PDF file under "Downloads"
Factory setting / CMPT = 2		
Profiles		Smart Sensor: Process Data Variable; Device Identification, Device Diagnosis
Min. process cycle time [ms]		2.3
IO-Link resolution pressure [bar]		0.01
IO-Link process data (cyclical)	**function**	**bit length**
	pressure	14
	binary switching information	2
IO-Link functions (acyclical)		application specific tag
Status_B High Resolution / CMPT = 3		
Profiles		Smart Sensor ED2: Digital Measuring Sensor (0x000A), Identification and Diagnosis (0x4000)
Min. process cycle time [ms]		3

PN2293

Pressure sensor with display

PN-025-REN14-MFRKG/US/ /V

IO-Link resolution pressure	[bar]	0.01	
IO-Link process data (cyclical)		**function**	**bit length**
		pressure	16
		device status	4
		binary switching information	2
IO-Link functions (acyclical)		application specific tag	

Operating conditions

Ambient temperature	[°C]	-25...80	
Storage temperature	[°C]	-40...100	
Protection		IP 65; IP 67	

Tests / approvals

EMC		DIN EN 61000-6-2	
		DIN EN 61000-6-3	
Shock resistance		DIN EN 60068-2-27	50 g (11 ms)
Vibration resistance		DIN EN 60068-2-6	20 g (10...2000 Hz)
MTTF	[years]	138	
UL approval		UL Approval no.	J012
Pressure Equipment Directive		Sound engineering practice; can be used for group 2 fluids; group 1 fluids on request	

Mechanical data

Weight	[g]	223.5
Housing		cylindrical
Dimensions	[mm]	Ø 34 / L = 90.7
Materials		stainless steel (316L/1.4404); PBT+PC-GF30; PBT-GF20; PC
Materials (wetted parts)		stainless steel (316L/1.4404); Al2O3 (96%; ceramics); FKM
Min. pressure cycles		100 million
Tightening torque	[Nm]	> 50; (depends on lubrication, seal and pressure rating)
Process connection		threaded connection 1/4" NPT internal thread
Restrictor element integrated		no (can be retrofitted)

Displays / operating elements

Display	Display unit	3 x LED, green (bar, psi, MPa)
	switching status	2 x LED, yellow
	measured values	alphanumeric display, red/green 4-digit

Remarks

Pack quantity	1 pcs.

Electrical connection

Connector: 1 x M12; coding: A; Contacts: gold-plated



PN2293

Pressure sensor with display

PN-025-REN14-MFRKG/US/ /V

Connection

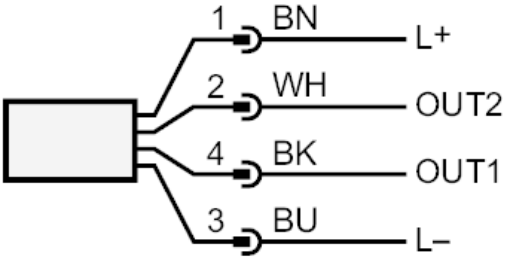

OUT1	switching output IO-Link
OUT2	switching output analogue output
	Core colours :
BK =	black
BN =	brown
BU =	blue
WH =	white