VARIMETER
Mains Frequency Monitor
MK 9143N, MH 9143

0257047



- According to IEC / EN 60 255-1
- Monitoring of 50 - and 60 Hz-current supply on over- and underfrequency
- Monitoring of local generator sets and voltage supplies
- For precise frequency measuring with fast response time
- High disturbance immunity
- Separately adjustable trip points and separate outputs for over- and underfrequency (1 or 2 c/o each)
- **MK 9143N / MH 9143**:
  - Trip points adjustable precisely and reproducible on 10 step rotational switch in the range of ± 0,1 Hz to ± 5 Hz related to 50 or 60 Hz
  - Nominal frequency 50 or 60 Hz selectable
  - Fixed hysteresis optimised for trip point
  - Time delay for over and underfrequency each adjustable from 0 to 20 s
  - As option one common output for under and overfrequency "Window"-mode (MK 9143N/400 / MH 9143/400)
- **MH 9143.38/008**: with galvanic separated analogue output (current/ voltage) and 11 step LED chain for the actual frequency
- **MK 9143N/600 / MH 9143/600**:
  - Variable alarm value in the range of 45 to 65 Hz
  - Hysteresis adjustable for under- and overfrequency separately adjustable 0 …20%
  - Common output for under and overfrequency "Window"-mode can be selected
- Start up delay 0…30 s selectable
- Manual or auto reset selectable
- Output relay energized or de-energized on trip selectable for overfrequency
- Output relay de-energized on trip for underfrequency
- Universal frequency measuring input for AC 40 … 550V
- Several options for auxiliary supply
- As option without aux. supply for voltage range AC 18 … 70 V or 70 … 275V
- LED indicators for auxiliary supply, input frequency, over and under frequency alarm
- 2 possible contact arrangements
  MK 9143N and MK 9143N/600: 2 x 1 C/O contacts, width 22,5 mm
  MH 9143 and MH 9143/600: 2 x 2 C/O contacts, width 45 mm

Circuit Diagrams

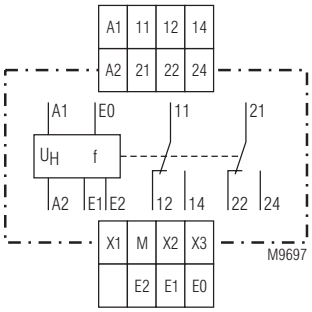

MK 9143N.38

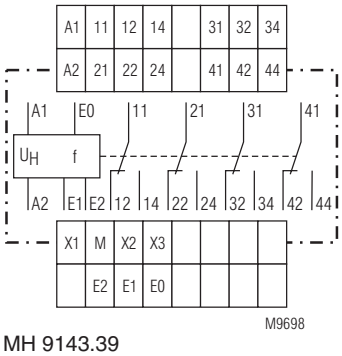

MH 9143.39

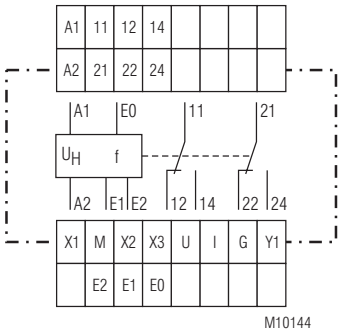

MH 9143.38/008

Approvals and Markings

CE

Connection Terminals

Terminal designation	Signal designation
A1+, A1	+ / L
A2	- / N
E0, E1, E2	Frequency input
X1, X2, X3	Programming terminals
M	Reference for programming terminals
U	Analogue output voltage
I	Analogue output current
G	Reference for analogue output
Y1	Range selection for analogue output
11, 12, 14, 21, 22, 24	"monitoring output frequency failure (2 changeover contacts)"

Application

Monitoring of local generator sets and voltage supplies

All technical data in this list relate to the state at the moment of edition. We reserve the right for technical improvements and changes at any time.

Function Diagram

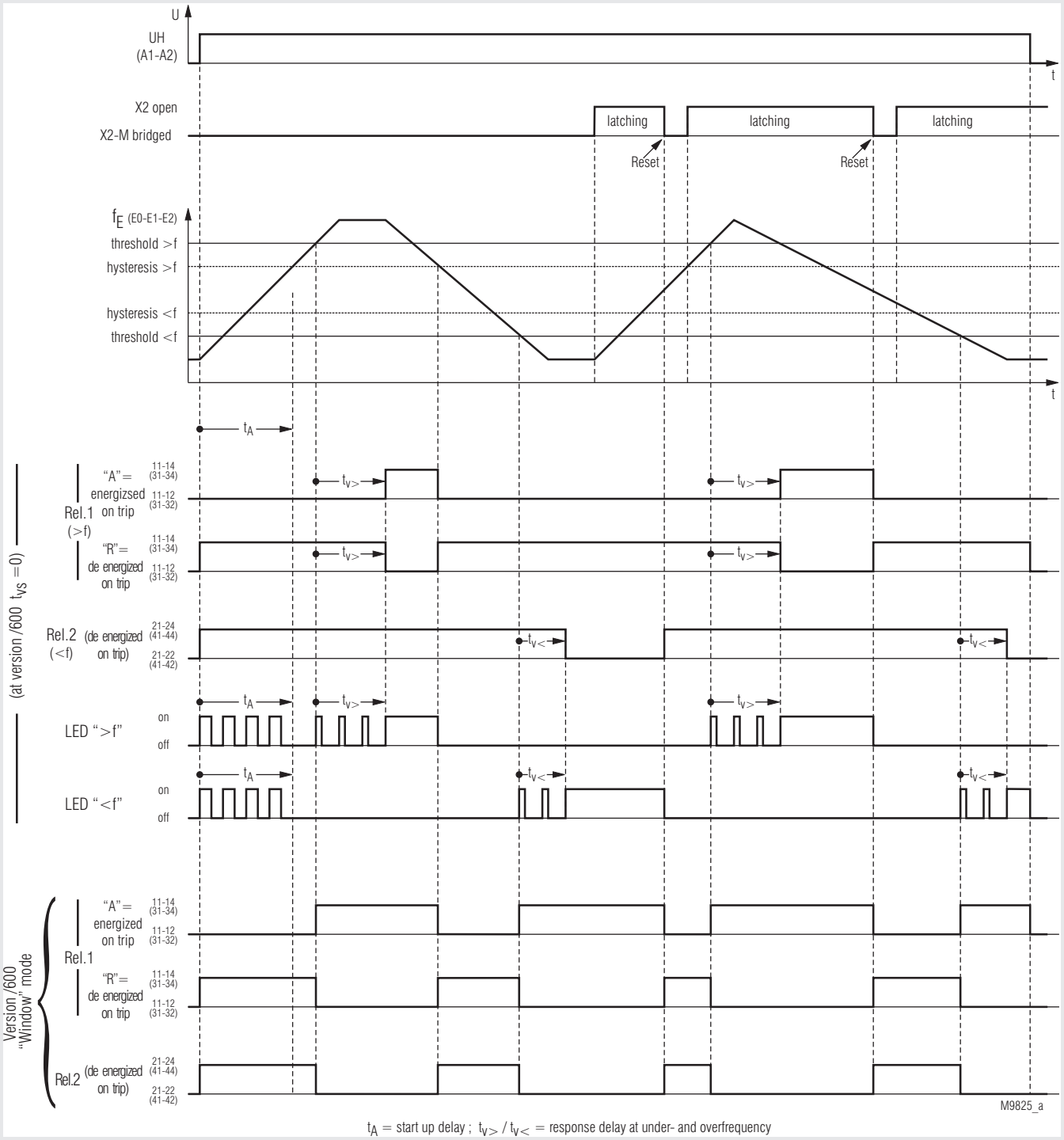

t_A = start up delay ; $t_{V>}$ / $t_{V<}$ = response delay at under- and overfrequency

Function

The auxiliary supply is connected to terminals A1-A2.
(If the measuring voltage is within the tolerances pf the auxiliary supply the terminals A1-A2 can also be supplied from the Measuring voltage.)
The measuring input is on terminals E0-E1-E2 with low voltages on E1-E0 and high voltages on E2-E0 (see technical data). The input frequency is compared to the values set on the device.
If the input frequency falls below or rises above the tripping value, the corresponding output relay goes in alarm state (with time delay if adjusted) and the LED >f or <f lights up. When the frequency returns to good state the relays the hysteresis is active before the relays return to good state and the corresponding LED goes off.
If manual reset is selected the relay and the LED remain in alarm state when the frequency returns to good state.
Manual reset is made by bridging terminals X2-M or by disconnecting the auxiliary supply.

In de-energized on trip mode the output relay is energized in good state (contacts 11-14 etc. closed).
In energized on trip mode the output relay is energized in alarm state (contacts 11-14 etc. closed).

If start up delay is selected a timer is started after connection of auxiliary supply that disables the measuring circuit for the adjusted time. Both LEDs <f and >f flash together and the relays are in non tripped state (Good state). Using the start up delay an alarm can be avoided during start up of a generator.

Indicators

Upper LED „UH/E“:	-	green, when only auxiliary voltage connected to A1 - A2
	-	yellow/green, when measuring frequency is detected on input
Lower LED „>f“ (yellow):	-	On, when overfrequency is detected, flashes (with short pulse) when time delay is active
Lower LED „<f“ (yellow):	-	On, when underfrequency is detected, flashes (with short pulse) when time delay is active
LEDs „>f“ and „<f“:		flash together during start up delay.

Settings

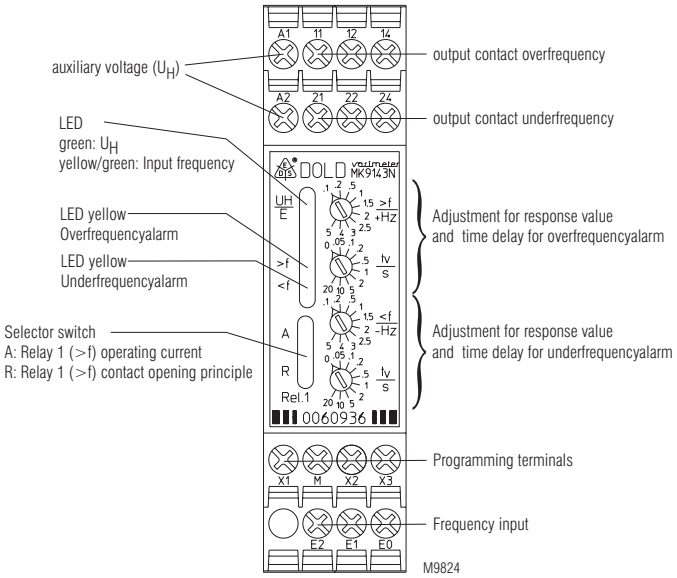

MK 9143N

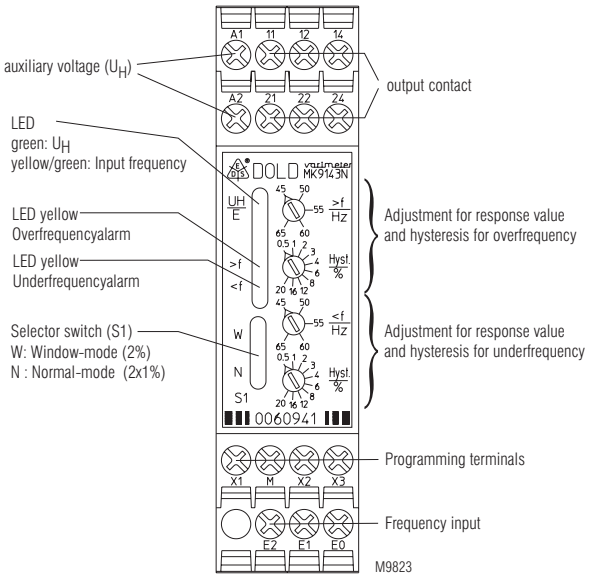

MK 9143N/600

Notes

Frequency measuring input
The standard frequency measuring input for Ac voltages AC 40…550V is divided in 2 ranges (40…150 V on E1-E0 and 150-550 V on E2-E0) to achieve a higher immunity against Harmonics and disturbance. If the measuring voltage is around 150 V the smaller range should be used, as it can be overloaded continuously up to 250 V. In the case of lower measuring voltages an input for AC 10-280 V E1-E0 and 20 to 550 V E2-E0 is available with slightly lower disturbance immunity. If the measuring signal is missing or if it is to low on E0-E1-E2 the upper 2 colour LED UH/E lights green. The underfrequency output is tripped in this case as well. When the input voltage is high enough on the measuring input this LED light yellow-green.

Output contacts
Relay 1 (11-12-14, and 31-32-34 on MH 9143.39) is tripped on overfrequency. Relay 2 (21-22-24, and 41-42-44 on MH 9143.39) is tripped on underfrequency.
On the variant /600the slide switch on the front can be switched to position W (window mode) in that position both relays switch on under- and overfrequency.
Relay 1 can be switched over from energized to de-energized on trip, relay 2 only operates de-energized on trip.
The model /400 operates always window mode. Both relays switch on over- and underfrequency. On this variant both relays can be switched over together between energized and de-energized on trip

Programming terminals (M – X1 – X2 – X3):

Attention! The terminals M-X1-X2-X3 have no galvanic separation to the measuring circuit, and must be operated potential free.

M: Common connection (Ground) of the programming terminals
X1: A start up delay of 0…30 s after connection of auxiliary supply is achieved by connecting a X1 to M with a potentiometer or fixed resistor (see technical data). The start up delay can be stopped by bridging X1 to M at any time.
If no start up delay is required the terminals X1-M must be linked.

X2: Manual reset with NO contact push button on X2-M, auto reset with terminals X2-M bridged.
X3: selection of nominal frequency 50 or 60 Hz with MK 9143N and MH 9143;
selection of relay mode energized or de-energized on trip for relay 1 with MK 9143N/600 and MH 9143/600

Model MK 9143N and MH 9143:
This variant offers a very accurate frequency setting that is required e.g. for small generator sets which feed the public mains:
- the adjustment of the tripping values for over and underfrequency is accurate and reproducible in 10 steps from + / - 0,1 Hz to + / - 5 Hz
- the hysteresis is always 1/8 of the adjusted tripping value, I, e, at setting + or -0,1 Hz it is 0,012 Hz and at setting + or -4 Hz it is approx. 0,5 Hz
- the tripping delay is separately adjustable for over and under-frequency with a range of 20 s.
- switching between energized and de-energized on trip of relay 1 by slide switch Rel.1 on the front
- programming of mains frequency 50 or 60 Hz with terminal X3:
  X3 open: Frequency 50 Hz
  X3 linked to M: Frequency 60 Hz

Notes

Variant MH 9143.38/008: 45 mm width

Identically to MK 9143N, but with 11 step LED chain indicator and galvanic separated analogue output to display the difference between measured frequency and the mains frequency (50 or 60 Hz).
On terminals U/G of the analogue output 0-10 V are provided, on terminals I/G 0-20 mA are available. By bridging terminals Y1 and G the output can be switched over to 2-10 V and 4-20 mA. The middle value of the analogue output indicates nominal frequency, the display and analogue output shows ± 10% difference to the nominal frequency.

Model MK 9143N/400 and MH 9143/400
Identical with MK 9143N and MH 9143 but both output relays switch together (Window mode) and both can be switched over together via slide switch from energized to de-energized on trip.

Model MK 9143N/600 and MH 9143/600
To be used on local generator sets and other equipment where larger frequency tolerances are necessary:
- Adjustment of the tripping values for over and underfrequency individual between 45 and 65 Hz
- Separate adjustable hysteresis for over and underfrequency in a range of 0,5 … 20% of the tripping value
- Output function can be changed with slide switch (S1)on the front:
  Position „N“: Normal mode: relay 1 for overfrequency, relay 2 for underfrequency
  Position „W“: Window mode: relay 1+2 switch together at over and underfrequency
- Switching between energized and de-energized on trip of relay 1 by terminal X3:
  X3 open: de-energized on trip for relay 1
  X3 linked to M: energized on trip for relay 1

Adjustment aid for start up delay and alarm delay
During the elapse of start up delay and alarm delay on MK 9143N and MH 9143) the yellow LED <f or >f is flashing with a frequency of 2 Hz. To set a specific time value in seconds the number of flash pulses can be used to check the setting: Number of flash pulses divided by 2 = time delay in seconds.

Technical Data

Measuring Input (E0-E1-E2)

Voltage range
E0-E1: AC 40 ... 150 V,
E0-E2: AC 150 ... 550 V
Input resistance
E0-E1: approx. 170 kΩ
E0-E2: approx. 640 kΩ
Galvanic separation: Frequency measuring input to auxiliary voltage and output contacts

Response time of Frequency monitoring: typ. 60 ms (when alarm delay is 0)

Time between connection of auxiliary supply and ready to mesure: approx. 0,4 s (with start up delay is 0)
Start up time delay: adjustable from 0 ... 30 s with resitor/potentiometer between terminals X1 and M:

R / kΩ:	0	4,7	12	22	39	56	100	180	390	∞
t_{Apl} / s:	0	0,5	1	2	4	6	10	15	20	100

Adjustment of the response values (frequency threshold for alarm)
MK 9143N, MH 9143: 10 individual step as deviation from nominal frequency.

Overfrequency:	+0,1	+0,2	+0,5	+1	+1,5	+2	+2,5	+3	+4	+5	Hz
Underfrequency:	-0,1	-0,2	-0,5	-1	-1,5	-2	-2,5	-3	-4	-5	Hz

Setpiont frequency: 50 or 60 Hz, selectable via connection of terminal X3

Accuracy of the frequency threshold: better than 200 ppm (0,02 %)

Technical Data

Auxiliary voltage- and temperature influence: less than 200 ppm (< 0,02 %)
Hysterese: 1/8 of adjusted deviation value of nominal frequency
Time delay: separately adjustable for over- and under frequency alarm: 0 ... 20 s adjustable on logarithmic scale.

Adjustment of response value (frequency threshold for alarm)
MK 9143N/600, MH 9143/600: continously variable, separately for over- and underfrequency alarm: each 45 ... 65 Hz
Setting accurancy: approx. 1 Hz
Hysteresis: continously variable, separately for over- and underfrequency alarm: each 0,5 ... 20 % of the setting alarm threshold

Tolerances of the adjusted tripping values at variation of auxiliary supply and temperature: ± 0,2 Hz

Auxiliary Circuit

Auxiliary voltage U_H
(galvanic separation): AC 115, 230, 400 V
DC 12, 24, 48 V
AC/DC 24 ... 60, 110 ... 230 V (only for MH-version possible)
Voltage range:
AC: 0,8 ... 1,1 U_H
DC: 0,9 ... 1,2 U_H
AC/DC: 0,75 ... 1,2 U_H
Frequency range
AC: 45 ... 440 Hz
Nominal consumption:
AC: approx. 4 VA
DC: approx. 2 W

Output 11-12-14, 21-22-24; + 31-32-34, 41-42-44 at MH 9143.39

Contacts
MK 9143N.38, MK 9143.38/600: 2 x 1 C/O contacts, each 1 for over- and underfrequency alarm
MH 9143.39, MH 9143.39/600: 2 x 2 C/O contacts, each 2 for over- and underfrequency alarm
Thermal current I_{th}: 4 A
Switching capacity
according to AC 15
NO contact: 3 A / AC 230 V IEC/EN 60 947-5-1
NC contact: 1 A / AC 230 V IEC/EN 60 947-5-1
according to DC 13
NO contact: 1 A / DC 24 V IEC/EN 60 947-5-1
NC contact: 1 A / DC 24 V IEC/EN 60 947-5-1
Elektrical life
acc. to AC 15 at 1 A, AC 230 V: 1,5 x 10^5 switching cycles IEC/EN 60 947-5-1
Short circuit strength
max. fuse rating: 4 A gL IEC/EN 60 947-5-1
Mechanical life: 30 x 10^6 switching cycles

Analogue Output with MH 9143.38/008

galvanic separation AC 3750V
to auxiliary supply, measuring circuit and relay outputs.
terminal U(+) / G(-): 0 ... 5 ... 10 V, max. 10 mA
terminal I (+) / G(-): 0 ... 10 ... 20 mA, max. burden 500 Ohm
change to 2 ... 10 V or 4 ... 20 mA by bridging terminal Y1 and G
Analogue output: ± 10% difference to the nominal frequency

Technical Data

General Data

Nominal operating mode: continuous operation
Temperature range:
Operation: - 20 ... + 60°C
Storage: - 25 ... + 60°C
Altitude: < 2.000 m
Clearance and creepage distance
rated impulse voltage / pollution degree:
output to measuring circuit: 4 kV / 2 IEC 60 664-1
output to auxiliary circuit: 4 kV / 2 IEC 60 664-1
output to output to: 4 kV / 2 IEC 60 664-1
auxiliary circuit to measuring input: 4 kV / 2 IEC 60 664-1
Programming terminals M-X1-X2-X3: without galv. separation to measuring circuit

EMC
Electrostatic discharge (ESD): 8 kV (air) IEC/EN 61 000-4-2
HF irradiation
80 MHz ... 1 GHz: 10 V / m IEC/EN 61 000-4-3
1 GHz ... 2.7 GHz: 3 V / m IEC/EN 61 000-4-3
Fast transients: 4 kV IEC/EN 61 000-4-4
Surge
between wires for power supply: 1 kV IEC/EN 61 000-4-5
between wire and ground: 2 kV IEC/EN 61 000-4-5
HF-wire guided: 30 V IEC/EN 61 000-4-6
Interference suppression: Limit value class B EN 55 011
Degree of protection:
Housing: IP 40 IEC/EN 60 529
Terminals: IP 20 IEC/EN 60 529
Housing: thermoplastic with V0 behaviour according to UL subject 94
Vibration resistance: Amplitude 0,35 mm
Frequency 10 ... 55 Hz IEC/EN 60 068-2-6
Climate resistance: 20 / 060 / 04 IEC/EN 60 068-1
Terminal designation: EN 50 005
Wire connection
Cross section: 1 x 4 mm² solid or
2 x 1,5 mm² solid or
1 x 2,5 mm² stranded wire with sleeve DIN 46 228-1/-2/-3/-4 or
2 x 1,5 mm² stranded wire with sleeve DIN 46 228-1/-2/-3/
Stripping length: 8 mm
Wire fixing: Plus-minus terminal screws
M4 box terminals with wire protection
Fixing torque: 0.8 Nm
Mounting: DIN rail IEC/EN 60 715
Weight:
MK 9143N, MK 9143/600: approx. 210 g
MH 9143, MH 9143/600: approx. 295 g
MH 9143.38/008: approx. 350 g

Dimensions

Width x heigh x depth:
MK 9143N, MK 9143/600: 22,5 x 90 x 97 mm
MH 9143, MH 9143/600: 45 x 90 x 97 mm

Standard Type

MK 9143N.38 + / - 5 Hz U_H AC 230 V
Article number: 0060936

- Each 1 C/O contact for over- and underfrequency
- Auxiliary voltage U_H: AC 230 V
- Frequency measuring input: AC 40 ... 150 / 150 ... 550 V
- Trip points adjustable precisely and reproducible on 10 step rotational switch in the range of ± 0.1 Hz to ± 5 Hz related to 50 or 60 Hz
- Switching setpoint frequency: 50 / 60 Hz
- Time delay for over and underfrequency each adjustable from 0 ... 20 s
- Start up delay: 0 … 30 s selectable
- Manual or auto reset selectable
- Width: 22.5 mm

Variants

MK 9143N.38/400: Same as MK 9143N.38, but with output relay in "Window"-Mode

MK 9143N.38/600:
- over- and underfrequency threshold each continously variable of 45 ... 65 Hz
- without time delay
- Hysteresis at over- and underfrequency each continously variable of 0.5 ... 20 %
- Funktion mode of the outputrelay switchable on "Window"

MK 9143N.38/801: Same as /600, but with fixed time delay for over- and underfrequency of 100 ms

MH 9143.38/008: Same as MK 9143N.38, but with galvanic separated analogue output (current/voltage) and 11 step LED chain.
Width: 45 mm

MH 9143.39: Same as MK 9143N.38, but with each 2 C/O contacts for over- and underfrequency
width: 45 mm

MH 9143.39/400: Same as MK 9143N.38/400, but with each 2 C/O contacts for over- and underfrequency
Width: 45 mm

MH 9143.39/600: Same as MK 9143N.38/600, but with 2 C/O contacts for over- and underfrequency
Width: 45 mm

Ordering example for variants

