sferaco
VALVES & FITTINGS

REF. 1311-1348

WALL TAP CONNECTION

ISO 9001-2008



Size :	DN 3/8", 1/2" and 3/4"
Ends :	Male, female BSP or for copper pipe D.12 to 16
Min Temperature :	0°C
Max Temperature :	+ 90°C
Max Pressure :	10 Bars
Specifications :	For sanitary valves

Materials : Brass CW617 N according to EN12165

Information provided as an indication and subject to possible modification

WALL TAP CONNECTION

SPECIFICATIONS :

- Brass wall tap connection
- For sanitary valves

USE :

- For water
- Min Temperature Ts : 0°C
- Max Temperature Ts : + 90°C
- Max Pressure Ps : 10 bars

RANGE :



- Chromed wall tap connection with nut **Ref. 1311** DN 1/2“ D.12 to 14



- Chromed wall tap connection without nut **Ref. 1312** DN 1/2“- D.14



- Wall tap connection without nut **Ref. 1313** DN 1/2“- D.14



- Wall tap connection with nut **Ref. 1314** DN 1/2" to 3/4“ – D.12 to 16



- Chromed male wall tap connection with nut, heavy type **Ref. 1315** DN 1/2“ – D.14



- Chromed wall tap connection with nut, heavy type **Ref. 1347** DN 1/2“ – D.12 to 14



- Chromed double, male input 1/2“ – female wall tap connection 1/2“ – Male output 3/8“ **Ref. 1348344**

WALL TAP CONNECTION

MATERIALS WALL TAP CONNECTION WITH NUT REF.1311, 1314, 1315 and REF.1347 :

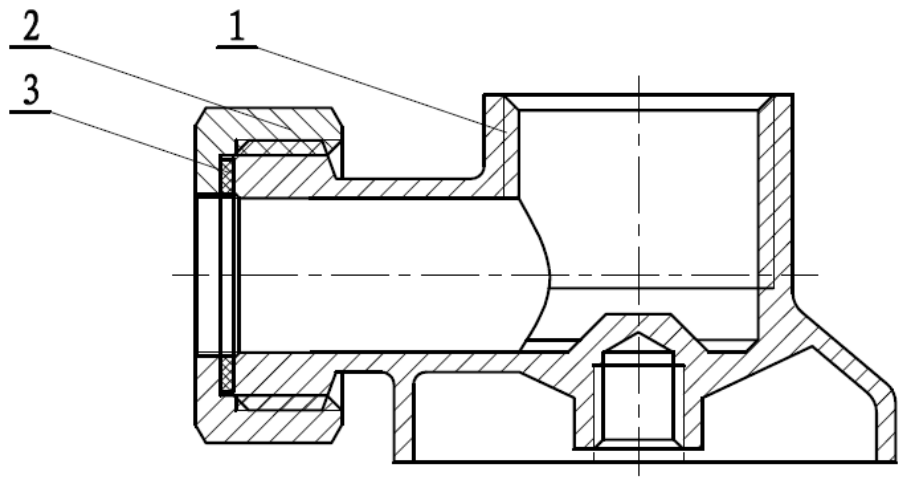

Item	Designation	Materials Ref.1311-1315-1347	Materials Ref.1314
1	Body	Brass CW 617 N according to EN 12165 chromed	Brass CW 617 N according to EN 12165
2	Nut	Brass CW 617 N according to EN 12165 chromed	Brass CW 617 N according to EN 12165
3	Gasket	Fibers	Fibers

MATERIALS WALL TAP CONNECTION WITHOUT NUT REF.1312 and REF.1313 :

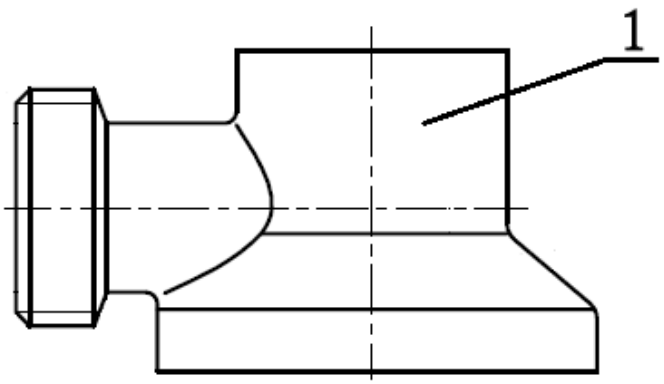

Item	Designation	Materials Ref.1312	Materials Ref.1313
1	Body	Brass CW 617 N according to EN 12165 chromed	Brass CW 617 N according to EN 12165

Information provided as an indication and subject to possible modification

WALL TAP CONNECTION

MATERIALS DOUBLE WALL TAP CONNECTION REF.1348 :

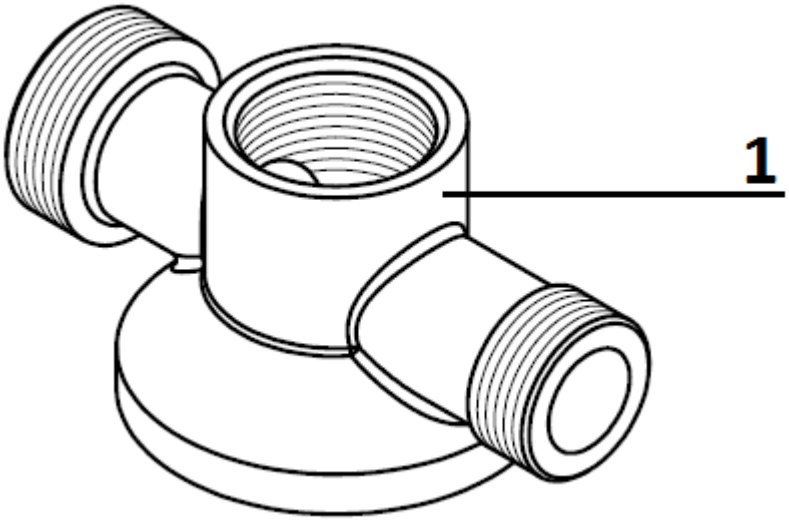

Item	Designation	Materials Ref.1348
1	Body	Brass CW 617 N according to EN 12165 chromed

WALL TAP CONNECTION

SIZE WALL TAP CONNECTION WITH NUT REF.1311 and REF.1314 (in mm) :

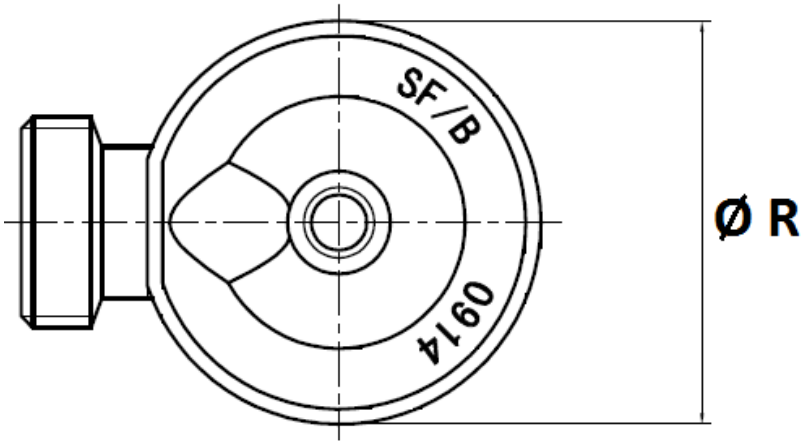

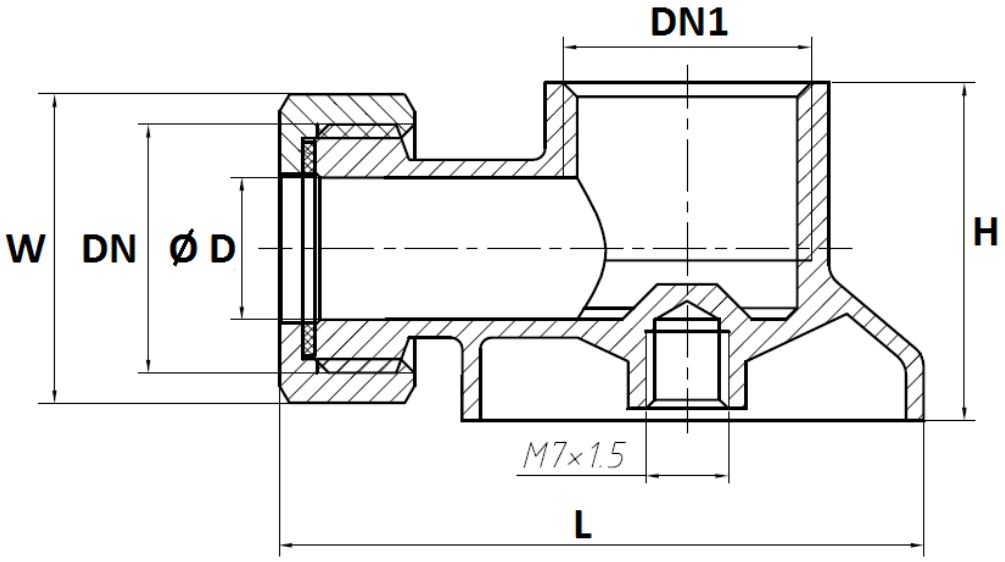

Ref.	DN	1/2"	1/2"	3/4"
1311/1314	DN1	1/2"	1/2"	3/4"
	Ø D	12	14	16
	L	55.5	55.5	71
	H	28.5	28.5	31
	Ø R	40	40	51
	W (on flat)	22.7	22.7	30
	Weight (in Kg)	0.088	0.085	0.170
1311	Ref.	1311412	1311414	-
1314	Ref.	1314412	1314414	1314516

WALL TAP CONNECTION

SIZE WALL TAP CONNECTION WITHOUT NUT REF.1312 and REF.1313 (in mm) :

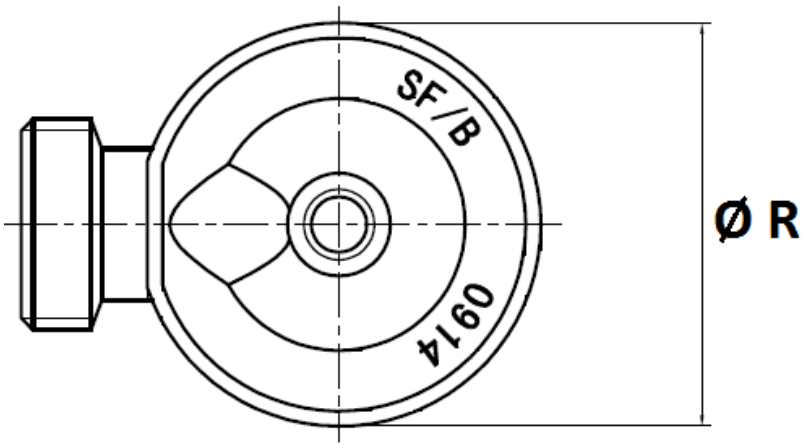

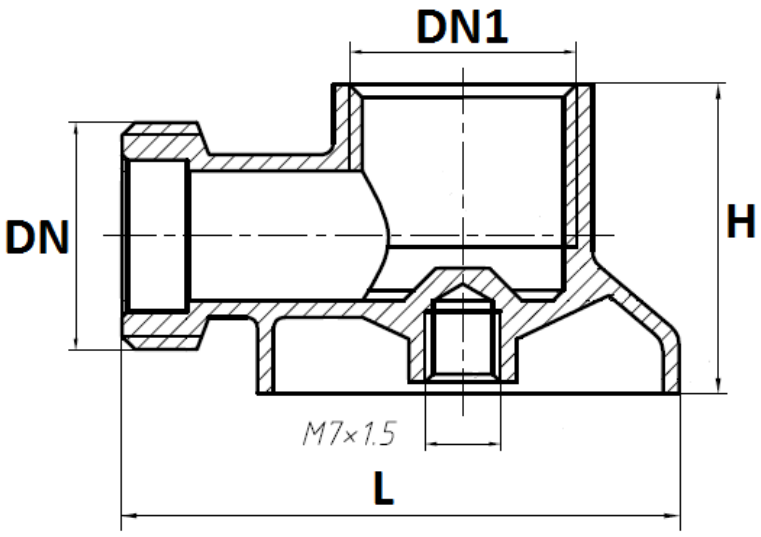

Ref.	DN	1/2"
1312/1313	DN1	1/2"
	H	28.5
	L	51
	Ø R	40
	Weight (in Kg)	0.070

WALL TAP CONNECTION

SIZE MALE WALL TAP CONNECTION HEAVY TYPE WITH NUT REF.1315 (in mm) :

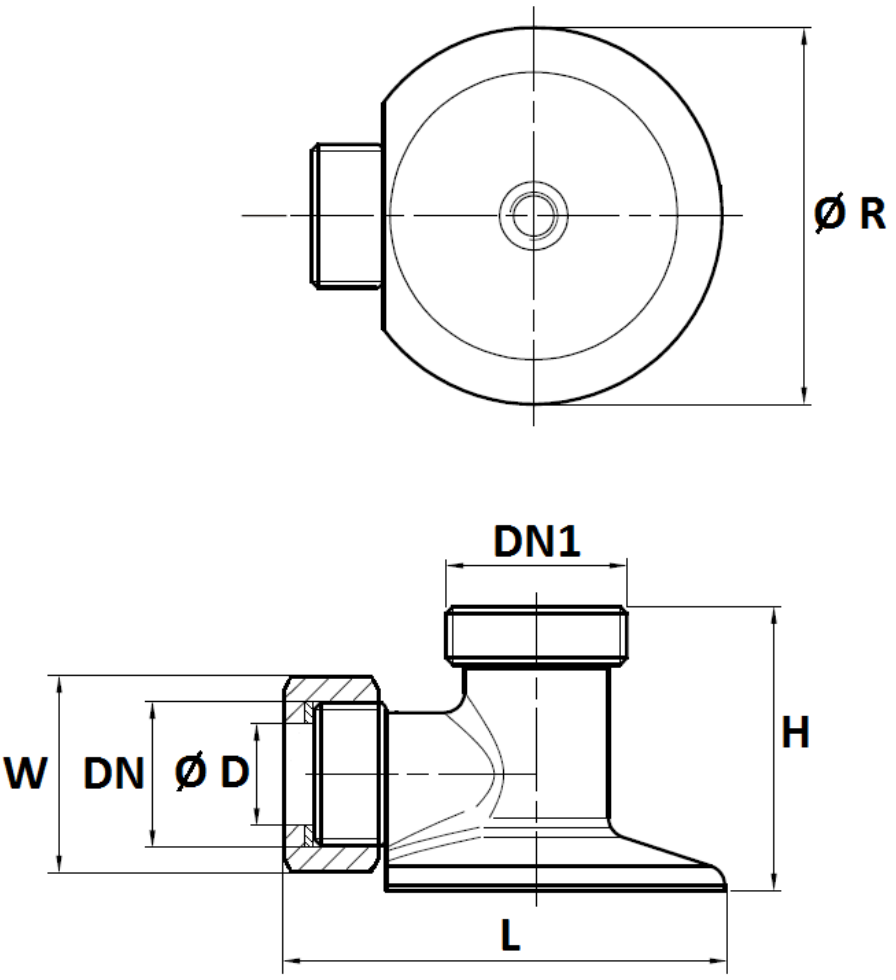

Ref.	DN	1/2"
1315	DN1	3/4"
	Ø D	14
	L	63
	H	41.5
	Ø R	55
	W (on flat)	22.7
	Weight (in Kg)	0.131

Information provided as an indication and subject to possible modification

WALL TAP CONNECTION

SIZE WALL TAP CONNECTION HEAVY TYPE WITH NUT REF.1347 (in mm) :

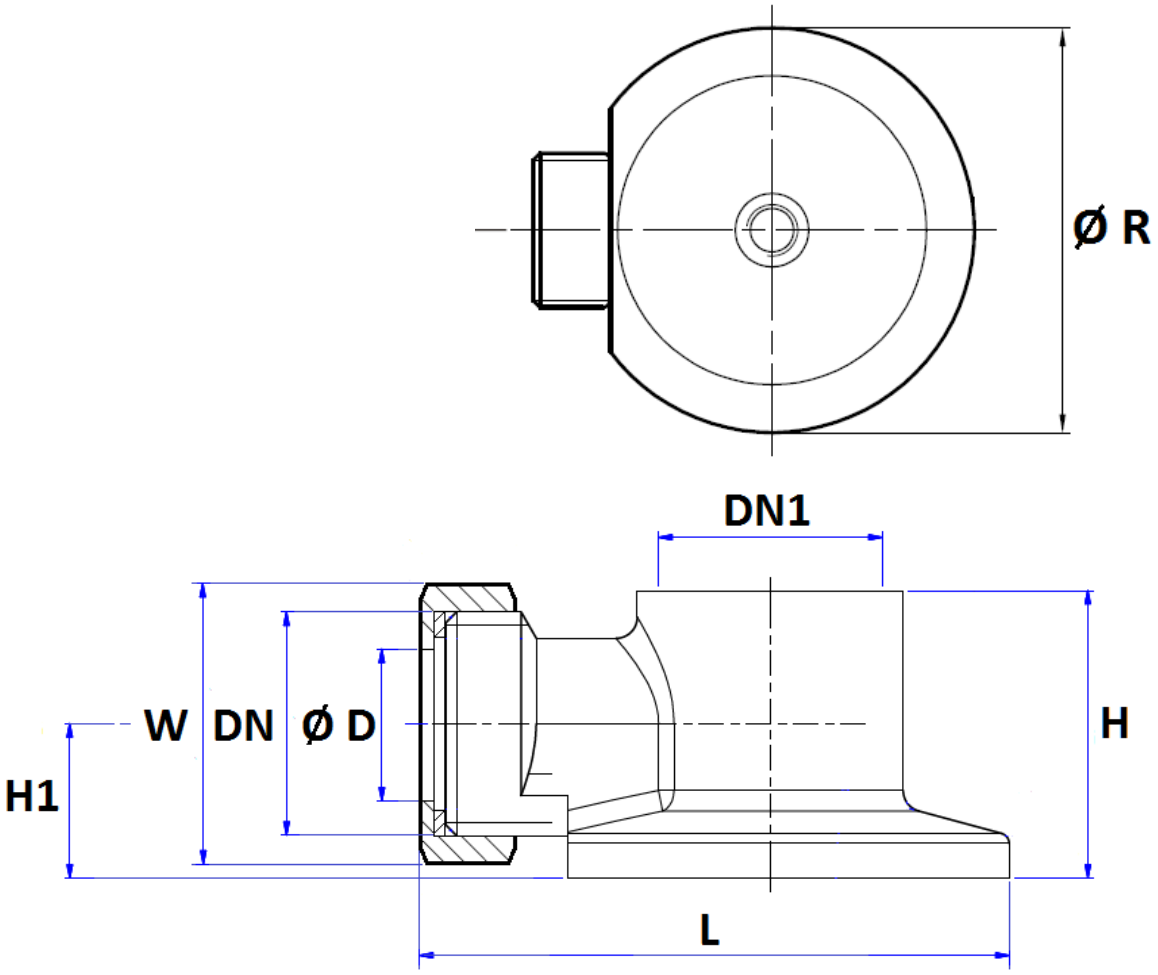

Ref.	DN	1/2"	1/2"
1347	DN1	1/2"	1/2"
	Ø D	12	14
	L	57	57
	H	27	27
	Ø R	45	45
	W (on flat)	22.7	22.7
	Weight (in Kg)	0.110	0.114
	Ref.	1347412	1347414

WALL TAP CONNECTION

SIZE DOUBLE MALE WALL TAP CONNECTION REF.1348 (in mm) :

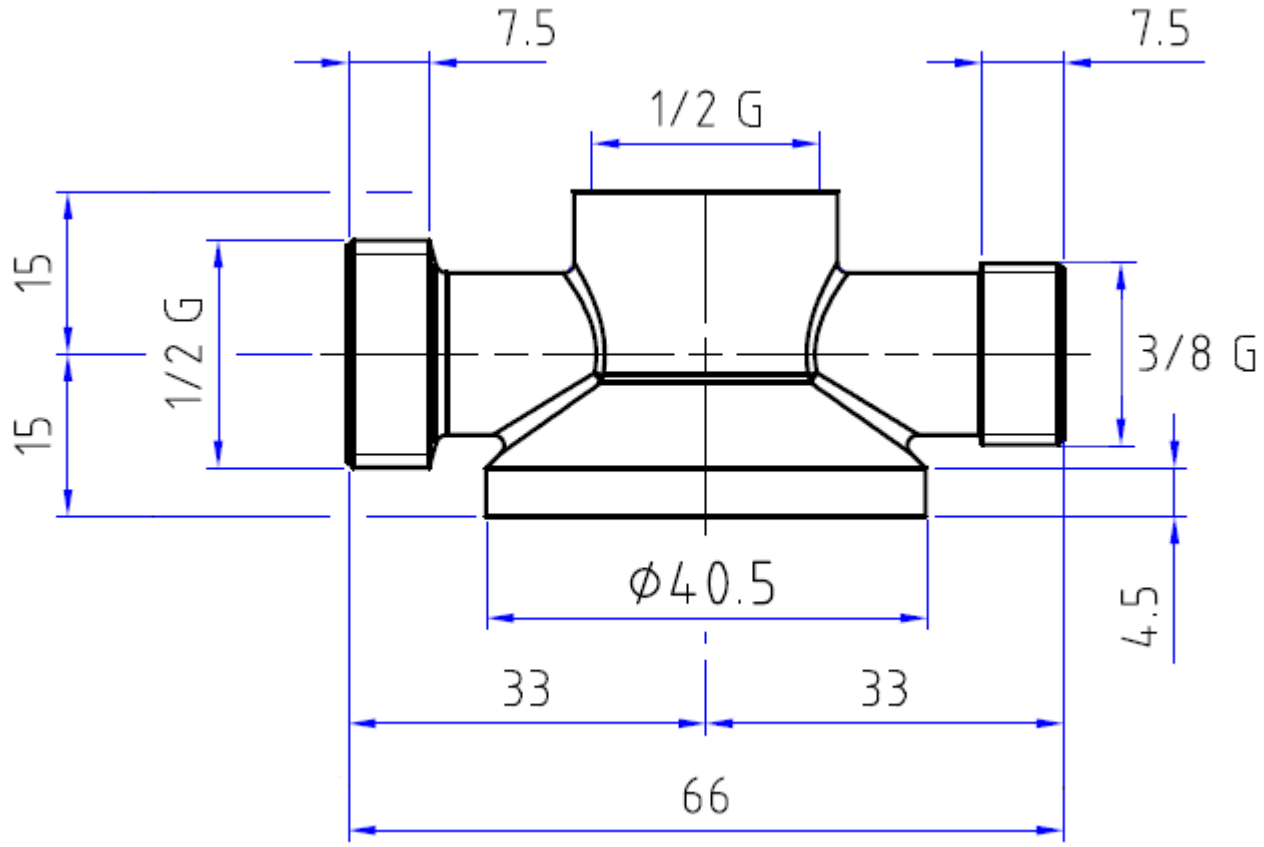

Ref.	DN	1/2"
1348344	Weight (in Kg)	0.114

WALL TAP CONNECTION

STANDARDS :

- Fabrication according to ISO 9001 : 2008
- **DIRECTIVE 97/23/CE** : Products excluded from directive (Article 1, § 3.2)

ADVICE : Our opinion and our advice are not guaranteed and SFERACO shall not be liable for the consequences of damages.
The customer must check the right choice of the products with the real service conditions.

WALL TAP CONNECTION

INSTALLATION

GENERAL GUIDELINES :

- Ensure that the valves to be used are appropriate for the conditions of the installation (type of fluid,pressure and temperature).
- Bes sure to have enough valves to be able to isolate the sections of piping as well as the appropriate equipment for maintenance and repair.
- Check the valves are installed according to existing standard.
- **Make the system so that it's possible to operate (open and close) regularly the valves (minimum 2 times per year).**

INSTALLATION

- **Before installation,pipe-line must be cleaned and free from residual of weldings,rubbish,shaving and every kind of extraneous materials.**
- **Pipe-line must be perfectly aligned and their support properly dimensioned so that there's no external.**
- **Check the lenght of the pipe-line,the valves and the wall tap connections because a deformation (dilatation, retractation) can occasion a leakage or can brake the valve.**
- **Before installation check the threaded ends so that they are cleaned.**
- **For sealing , use only PTFE.**
- **Do not tighten above a torque of 30 Nm.**
- **Use the right tools to avoid breaking the pieces.**
- **Never tighten the valves more than indicated and do not use the ends of the valves to tighten or place them.**
- **For the free nut types , use a spanner with a moderate torque.**
- **If mounting with PER tubing and hoses, it is necessary to support the tubes and hoses with the fixing to avoid strain on the valve.**

The advice and assembly instructions above do not conform to any guarantee.
The information is given in general.It states what must not and must be done.It is provided to ensure the safety of the personnel and the reliability of the valves.
The instructions in bold must be followed.

Information provided as an indication and subject to possible modification