ISO 21287, Series CCL-IC

R480668802

General series information
AVENTICS Series CCL-IC Standard cylinders (ISO 21287)

- The AVENTICS Series CCL-IC (ISO 21287) cylinders with their compact and clean design can be used in a wide range of applications. Their smooth surface together with their materials, such as anodized aluminium, stainless steel, and NSF-H1 lubricants, make the cylinder ideal for the demanding requirements in the food and beverage industry.





Technical data

Industry	Industrial
Standards	ISO 21287
Piston Ø	20 mm
Stroke	40 mm
Ports	M5
Functional principle	Double-acting
Cushioning	Elastic cushioning
Magnetic piston	Piston with magnet
Environmental requirements	Industry standard suitable for use in food processing ATEX optional High corrosion
Piston rod	single
Scraper	Standard Industry Scraper
Pressure for determining piston forces	6,3 bar

Retracting piston force	148 N
Extracting piston force	198 N
Min. ambient temperature	-20 °C
Max. ambient temperature	80 °C
Working pressure min.	1 bar
Working pressure max	10 bar
Piston rod thread	M6
Impact energy	0.2 J
Weight 0 mm stroke	0.119 kg
Weight +10 mm stroke	0.019 kg
Stroke max.	300 mm
Medium	Compressed air
Min. medium temperature	-20 °C
Max. medium temperature	80 °C
Max. particle size	50 µm
Oil content of compressed air min.	0 mg/m³
Oil content of compressed air max.	5 mg/m³

Material

Piston rod	Stainless Steel
Scraper material	Polyurethane
Material, front cover	Aluminum
Cylinder tube	Aluminum
End cover	Aluminum
Part No.	R480668802

Technical information

The material for heat-resistant scraper and seal variants (ambient temperature: -10 °C ... 120 °C) is fluorocaoutchouc.

Further options can be generated in the Internet configurator.

The pressure dew point must be at least 15 °C less than ambient and medium temperature and may not exceed 3 °C.

The oil content of compressed air must remain constant during the life cycle.

ATEX-certified cylinders with identification II 2G Ex h IIC T4 Gb / II 2D Ex h IIIC T135°C Db_X can be generated in the Internet configurator.

Dimensions

Ø16 - 63

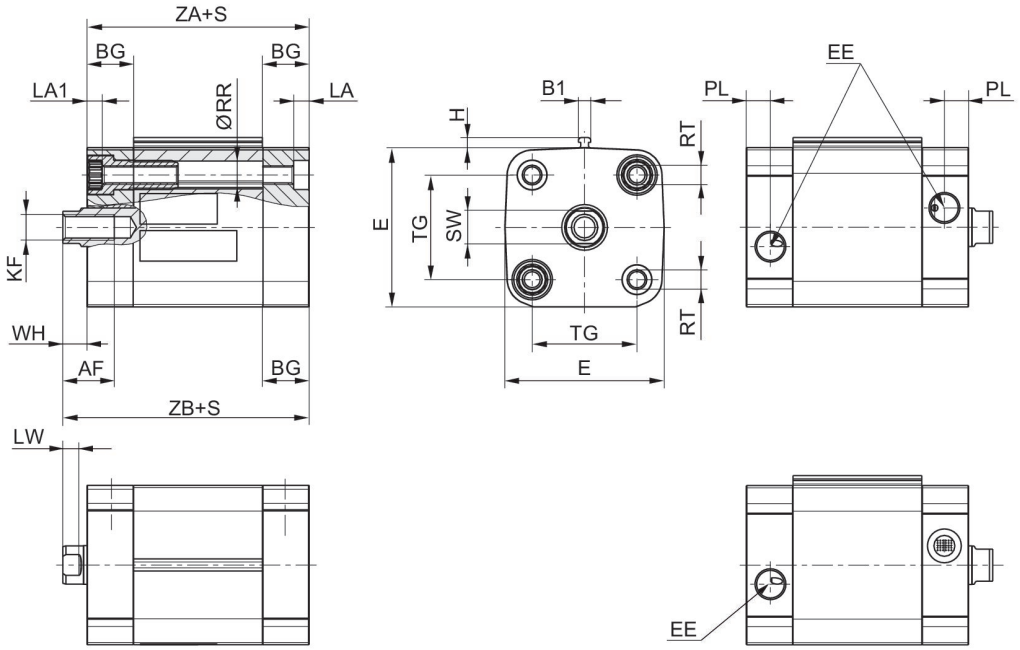

Ø80 - 100

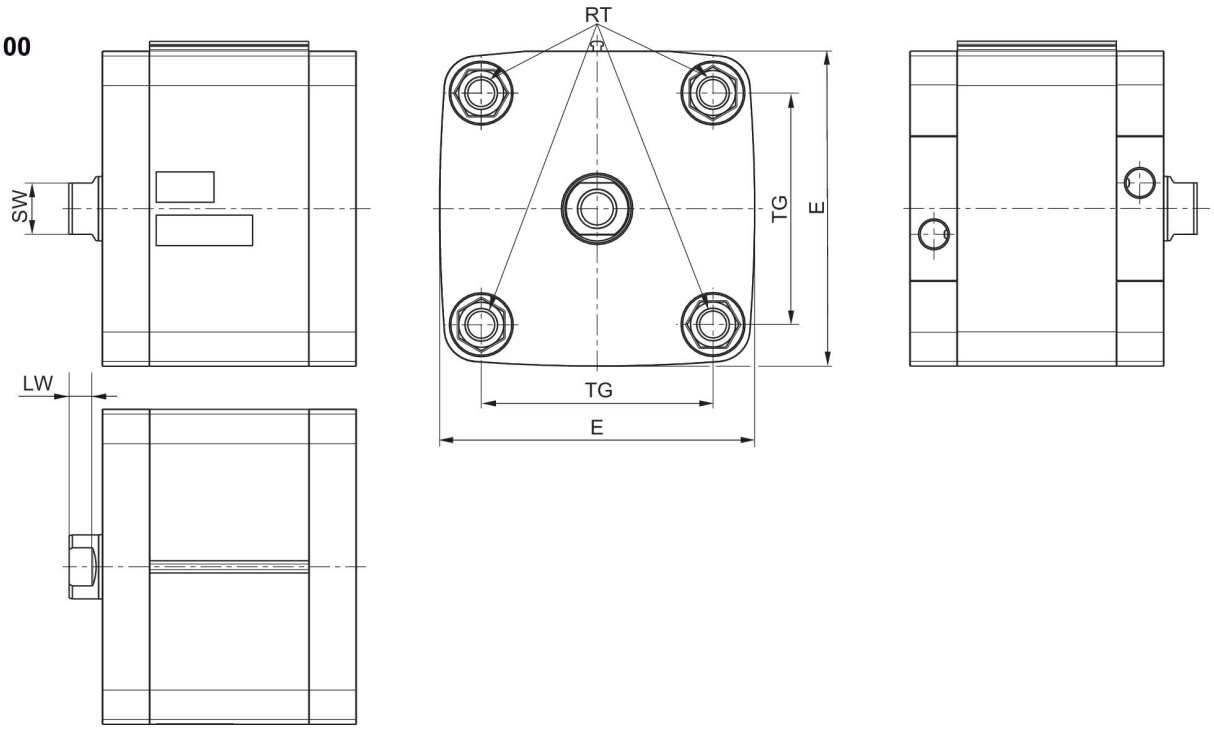

S = stroke

Ø80 - 100

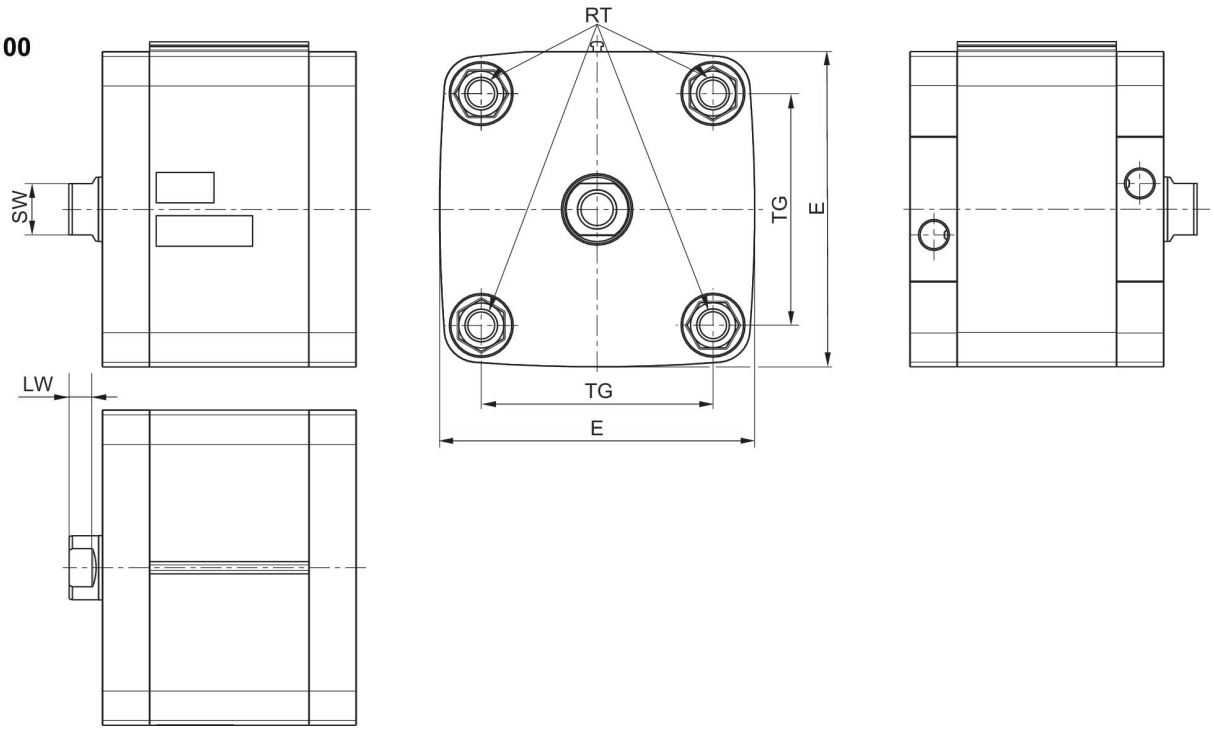

Piston Ø	AF	B1	BG min.	E** ISO 21287: 96	EE	H	KF	LA	LA1
16	10	3.8	15	29	M5	3.1	M4	3.5	3.5
20	10	3.8	15	36.5	M5	3.1	M6	4.8	4.6
25	10	3.8	15	40.5	M5	3.1	M6	4.8	4.6
32	12	3.8	16	49.5	G1/8	3.1	M8	4.8	4.8
40	12	3.8	16	57.5	G1/8	3.1	M8	4.8	4.8
50	16	3.8	16	69.5	G1/8	3.1	M10	4.8	4.8
63	16	3.8	16	79.5	G1/8	3.1	M10	4.8	4.8
80	20	3.8	17	98**	G1/8	3.1	M12	0	0
100	20	3.8	17	115.5	G1/8	3.1	M12	0	0

Piston Ø	LW	PL	RR min.	RT	SW	TG	WH	ZA +S	ZB +S
16	3.2	5	3.2	M4	7	18 ±0,4	4,8 ±1,4	36	40.8
20	3.7	5	4.1	M5	8	22 ±0,4	6 ±1,4	37	43
25	3.7	5	4.1	M5	8	26 ±0,4	6 ±1,4	39	45
32	5	7.5	5.1	M6	10	32,5 ±0,5	7 ±1,6	44	51
40	5	7.5	5.1	M6	10	38 ±0,5	7 ±1,6	45	52
50	5.7	7.5	6.4	M8	13	46,5 ±0,6	8 ±1,6	45.5	53.5
63	5.7	7.5	6.4	M8	13	56,5 ±0,7	8 ±1,6	49	57
80	7	7.5	8.4	M10	16	72 ±0,7	10 ±2	54	64
100	7.5	7.5	8.4	M10	21	89 ±0,7	10 ±2	67	77

Overview drawing

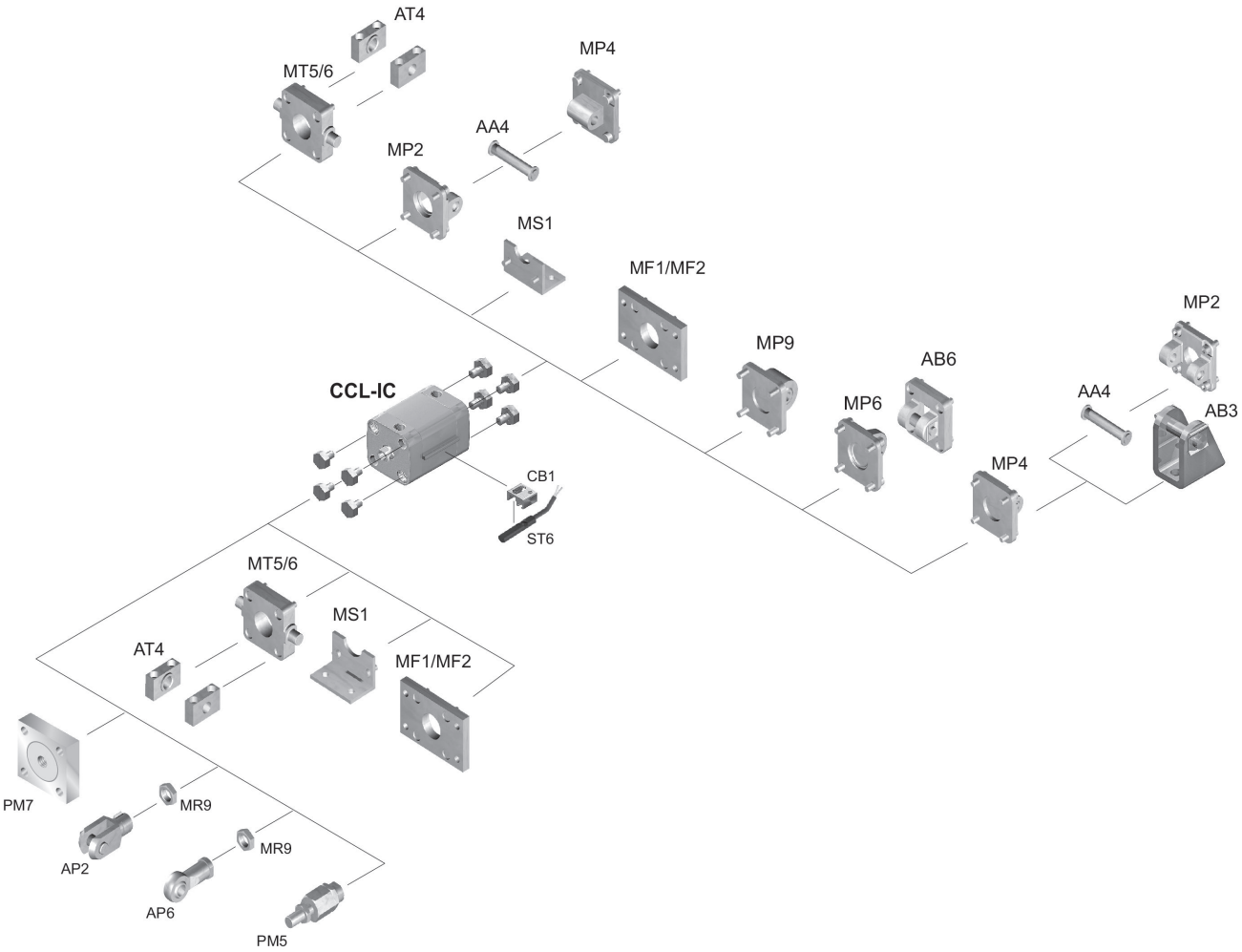

NOTE: This overview drawing is only for orientation to indicate where the various accessory parts can be fastened to the cylinder. The illustration has been simplified for this purpose. It is thus not possible to derive the dimensions from this overview.