TIMKEN

The Timken Company
4500 Mt Pleasant St. NW
N. Canton, OH 44720
Phone: (234) 262-3000
E-Mail: CustomerCAD@timken.com • **Web site:** www.timken.com

Timken Part Number 72212C - 72487, Tapered Roller Bearings - TS (Tapered Single) Imperial

This is the most basic and most widely used type of tapered roller bearing. It consists of two main separable parts: the cone (inner ring) assembly and the cup (outer ring). It is typically mounted in opposing pairs on a shaft.



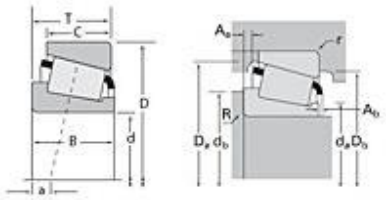

Specifications | Dimensions | Abutment and Fillet Dimensions | Basic Load Ratings | Factors

Specifications

Series	72000C
Cone Part Number	72212C
Cup Part Number	72487
Design Units	Imperial
Bearing Weight	4.50 lb 2.000 Kg
Cage Type	Stamped Steel

Dimensions

d - Bore	2.1250 in 53.975 mm
D - Cup Outer Diameter	4.8750 in 123.825 mm

B - Cone Width	1.2910 in 32.791 mm
C - Cup Width	1.0000 in 25.400 mm
T - Bearing Width	1.4375 in 36.513 mm

Abutment and Fillet Dimensions

R - Cone Backface "To Clear" Radius[1]	0.14 in 3.560 mm
r - Cup Backface "To Clear" Radius[2]	0.130 in 3.30 mm
da - Cone Frontface Backing Diameter	2.64 in 67.06 mm
db - Cone Backface Backing Diameter	3.11 in 78.99 mm
Da - Cup Frontface Backing Diameter	4.60 in 116.10 mm
Db - Cup Backface Backing Diameter	4.02 in 102.11 mm
Ab - Cage-Cone Frontface Clearance	0.2 in 5.1 mm
Aa - Cage-Cone Backface Clearance	0.15 in 3.8 mm
a - Effective Center Location[3]	0.08 in 2.00 mm

Basic Load Ratings

C90 - Dynamic Radial Rating (90 million revolutions)[4]	12500 lbf 55500 N
C1 - Dynamic Radial Rating (1 million revolutions)[5]	48200 lbf 214000 N
C0 - Static Radial Rating	46800 lbf 208000 N
C_{a90} - Dynamic Thrust Rating (90 million revolutions)[6]	15800 lbf 70100 N

Factors

K - Factor[7]	0.79
e - ISO Factor[8]	0.74
Y - ISO Factor[9]	0.81
G1 - Heat Generation Factor (Roller-Raceway)	57.4
G2 - Heat Generation Factor (Rib-Roller End)	13.5
Cg - Geometry Factor	0.0825

[1] These maximum fillet radii will be cleared by the bearing corners.
[2] These maximum fillet radii will be cleared by the bearing corners.
[3] Negative value indicates effective center inside cone backface.
[4] Based on 90 x 10^6 revolutions L_{10} life, for The Timken Company life calculation method. C_{90} and C_{a90} are radial and thrust values.
[5] Based on 1 x 10^6 revolutions L_{10} life, for the ISO life calculation method.
[6] Based on 90 x 10^6 revolutions L_{10} life, for The Timken Company life calculation method. C_{90} and C_{a90} are radial and thrust values for a single-row, $C_{90(2)}$ is the two-row radial value.
[7] These factors apply for both inch and metric calculations. Consult your Timken representative for instruction on use.
[8] These factors apply for both inch and metric calculations. Consult your Timken representative for instruction on use.
[9] These factors apply for both inch and metric calculations. Consult your Timken representative for instruction on use.

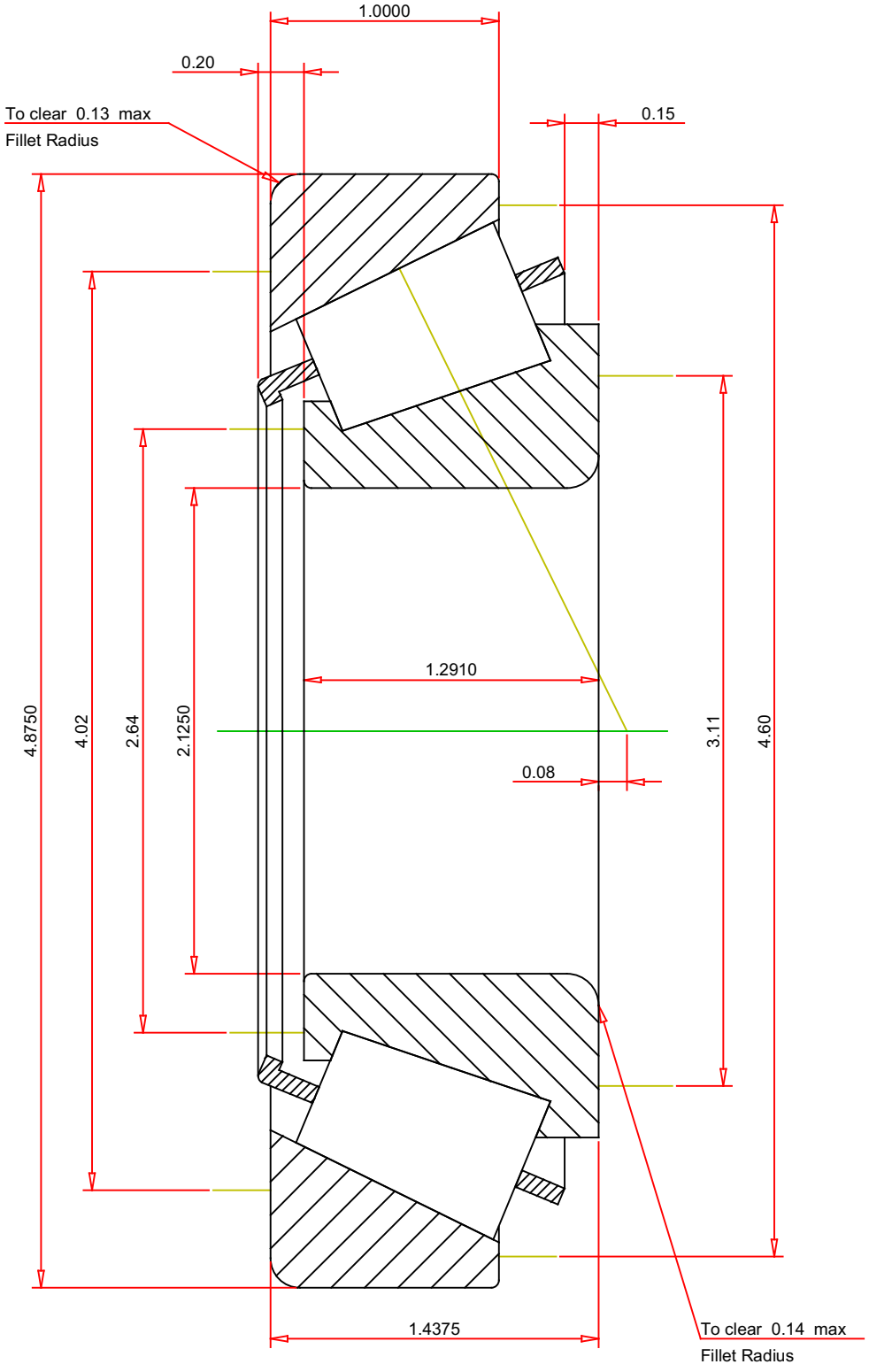

IMPERIAL UNITS

ISO Factor - e	0.74	
ISO Factor - Y	0.81	
Bearing Weight	4.5	lb
Number of Rollers Per Row	16	
Effective Center Location	0.08	inch

TIMKEN®

THE TIMKEN COMPANY
NORTH CANTON, OHIO USA

72212C - 72487
TS BEARING ASSEMBLY

K Factor	0.79	
Dynamic Radial Rating - C90	12500	lbf
Dynamic Thrust Rating - Ca90	15800	lbf
Static Radial Rating - C0	46800	lbf
Dynamic Radial Rating - C1	48200	lbf

Every reasonable effort has been made to ensure the accuracy of the information contained in this writing, but no liability is accepted for errors, omissions or for any other reason.

FOR DISCUSSION ONLY