easyE4

The fastest path to success







Powering Business Worldwide

easyE4 control relay

More time for the really important things

Whether it's about temperature control in the food industry, simple control tasks in the machine building sector or lighting control in buildings—the easyE4, Eaton's next generation of control relays, makes implementing control tasks even easier, more convenient and faster. Experience the many advantages of this new technology, which allows you to free up valuable time for what's really important.

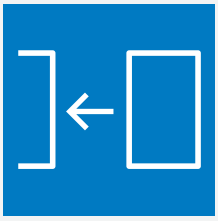

Offering maximum flexibility, with **up to 11 local expansion modules per base unit.**

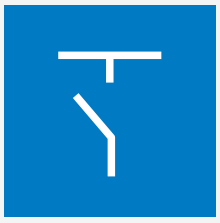

The **188 available inputs/outputs in one easyE4 system** provide coverage for a broad range of applications.

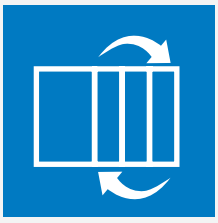

The virtually **unlimited combination options** of base units and expansion modules make the handling of the easyE4 devices extremely easy.



Mixed connection of AC/DC/UC modules allows flexibility in the application.

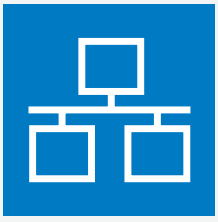

The **Ethernet connection** enables a wide range of enhanced communication options.

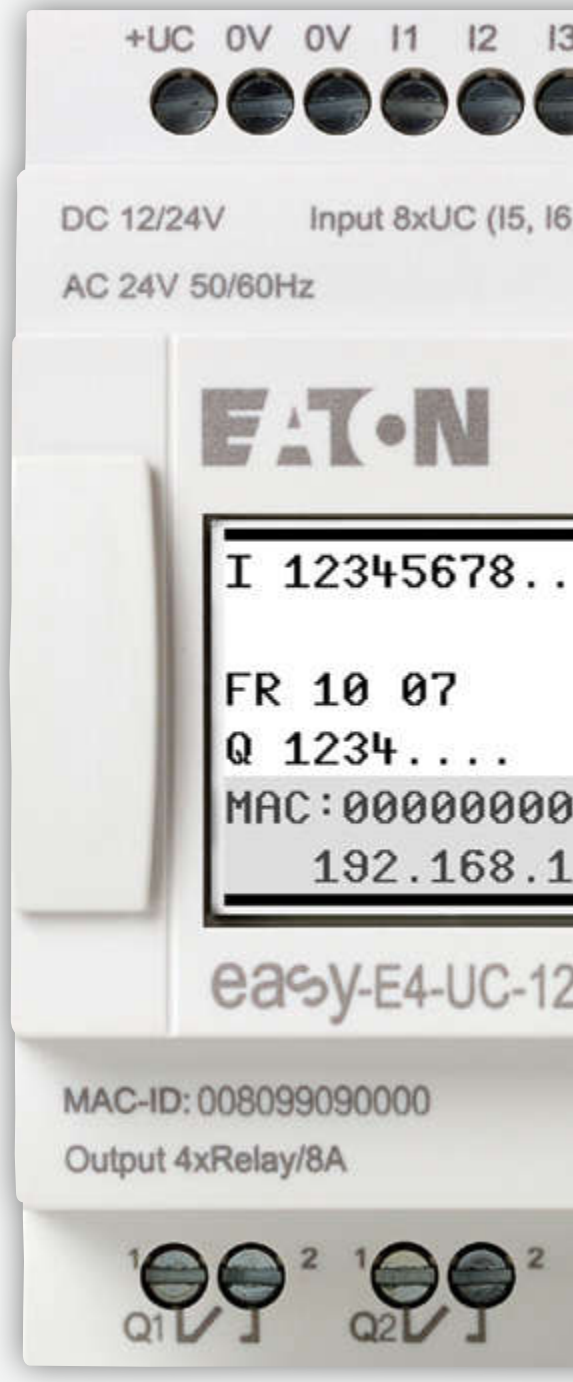





Four programming languages are available: easySoft speaks your language!

Various visualization options are available, via the integrated displays, web server as well as the Ethernet options.

Interrupt features enable fast event recognition and rapid response times.

DCF77 synchronization as well as Ethernet services enable highly precise date and time indication.

The devices are **suitable for global use** and come with all the necessary approvals.

From planning to maintenance
Consistently simple

The easyE4 supports you every step of the way—starting with the planning phase, thanks to the optimized size of the assortment. Enjoy greater flexibility, more transparency and time savings that will allow you to devote yourself to other tasks.



Multifunctionality ensures simplified planning

The easy relay takes on various command and control tasks in a single device:

- Logic functions
- Timing relay and counter functions
- Time switch functions
- Arithmetic functions
- PID controller
- Operating and display functions.

This simplifies the planning process:

- Up to 11 expansions can be connected
- The AC, DC and UC expansions can be used together in any combination (12/24 V DC, 24 V AC, 100-240 V AC)

Programming options that are suited to your needs

The easyE4 offers flexible programming options, either directly on the device, or via the easySoft software:

- Circuit diagrams can be created directly on the base unit, using the input keypad and text display
- Programming the devices is highly user-friendly, thanks to the four available programming languages
- The display texts, background colors and start graphics can be individually designed, for example, by adding your company's own graphics.





Everything at a glance during maintenance

The various available display options allow you to gain a quick and comprehensive overview of your projects:

- A base-unit display that's easy to use
- Remote visualization and access are also possible, for example via a smartphone or tablet
- Easy data logging of operating states and evaluation of events



Installation and commissioning made easy

The number of inputs/outputs can be easily extended with the addition of expansion modules:

- The expansion modules are connected via a unique plug connector.
- It is easy to install programming on brand-new devices via the SD card. This considerably simplifies, for example, the commissioning of series production.

Quick and easy implementation during operation

The full advantages of this powerful control relay reveal themselves during operation:

- Rapid response times of less than 2 milliseconds
- DCF77 synchronization for high accuracy in time-dependent applications
- Rapid detection of the operating states of both the base units and the expansion modules thanks to the integrated display
- The application-specific parameters can be manually adjusted directly on the device



easySoft 7

Simple, intuitive and convenient

With the user-friendly easySoft software, programming the devices is quick and easy. Circuit diagrams can be easily created and adapted via a PC or directly on the device. The easy-to-navigate selection menus, as well as the simulation, online communications and documentation options, make easySoft the ideal companion for the easyE4 devices. Four different programming languages are available (ST, FBD, LD, EDP)—in other words, the right programming environment for all of your needs.

- **Ladder diagram (LD)** for transferring existing easySoft programs
- **easy programming EDP** enables the creation and adaptation of programs on the devices
- **Function block diagram (FBD)** provides a quick overview of the various features
- **Structured text (ST) for professionals,** to facilitate efficient programming

EDP

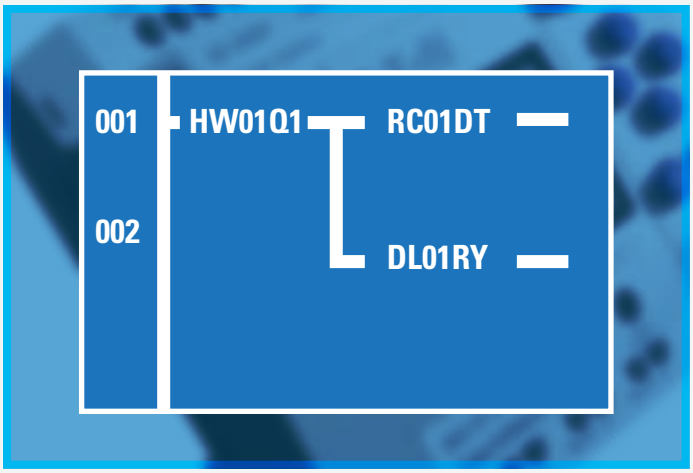

FBD

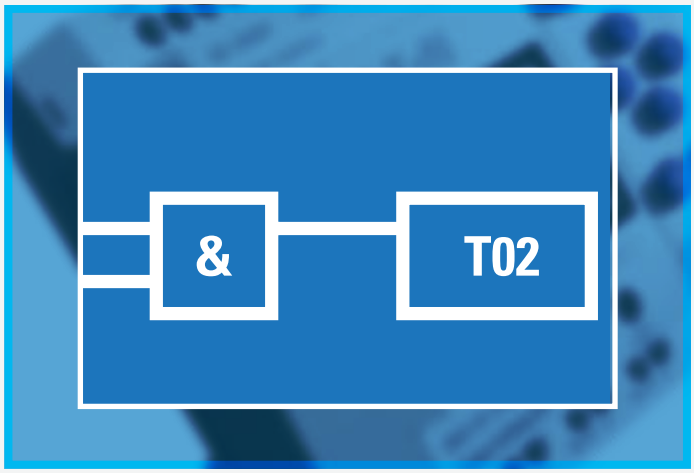

LD

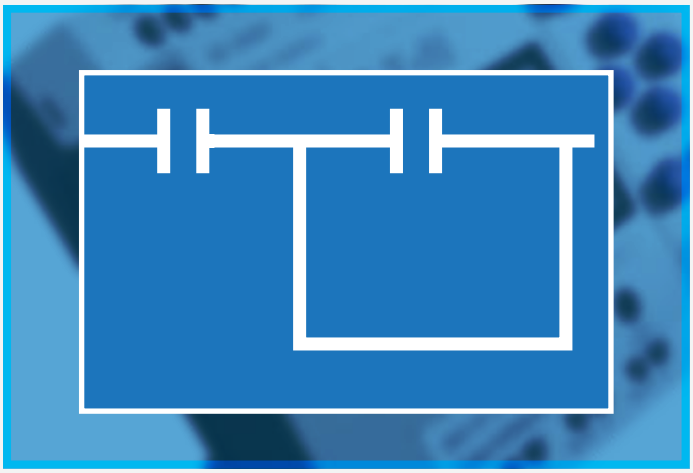

ST

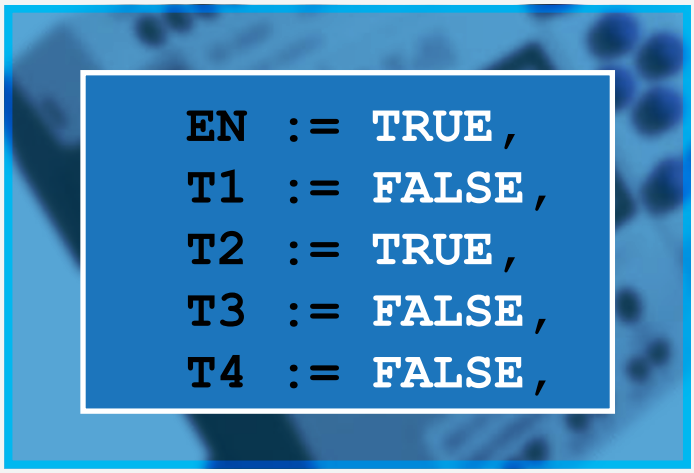



- The **multi-level password protection** protects your application and process know-how against unauthorized access.
- **Unique IDs for each easyE4 and program** ensure that the correct programs are uploaded to the intended hardware (pairing).

Download easySoft

Video Tutorials

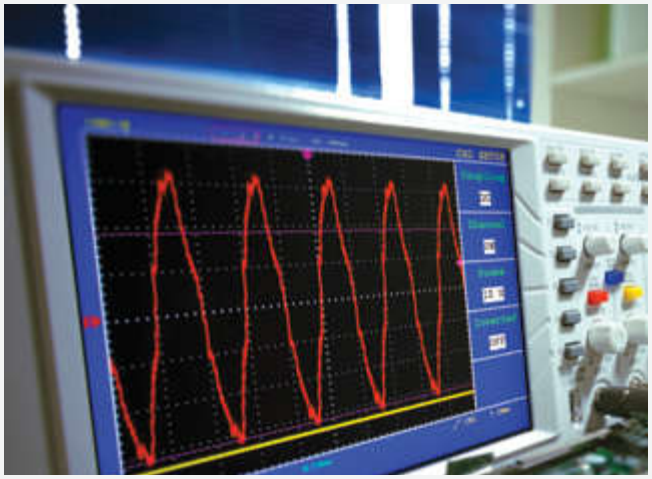

- The **integrated oscilloscope feature** can be used both in simulation mode and during operation
- **Direct analysis of switching operations,** based on the curve characteristics
- Pre-set analytics allow **quick commissioning**

The system is backward compatible

- With easySoft 7, existing programs that were created for the easy series 500/700/800 can simply be transferred
- Automatic conversion of visualizations from the previous easy series to the new easyE4



Visualization for every need

Simply versatile

The easyE4 also offers a variety of visualization options to optimally adapt the solution to your individual needs and requirements. Texts and data can be easily displayed or changed using the easyE4 base unit display. Thanks to the integrated web server, the data can also be accessed via all Internet-enabled devices, such as smartphones or tablets. In addition, visualization through HMIs is also possible. The access to the data can be individually defined.

easyE4 display

Use the display of the basic unit for convenient visualization on site.

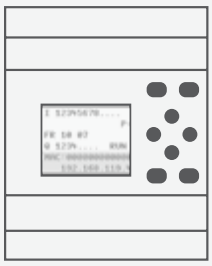

Visualization via Ethernet

Any HMI, like an XV100, can be connected to the easyE4, for example via Modbus TCP.

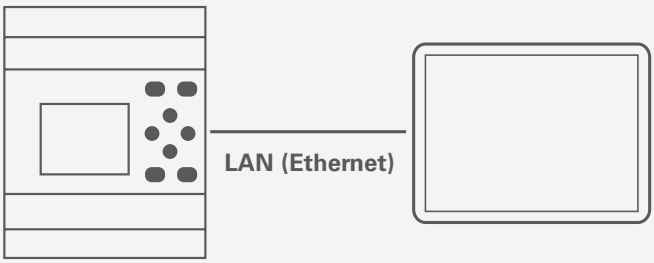

Wireless visualization

Any standard browser can access the easyE4 web server via a WLAN router, a repeater or dLan.

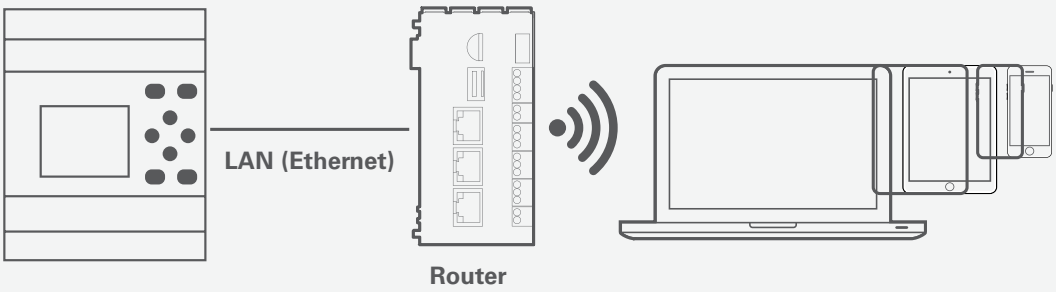



- The **web server** is **password protected**
- An **individual user list** ensures secure remote access to the web browser.
- **Efficient service and maintenance,** thanks to the reliable online services in easySoft.
- **Automatic email notifications** will promptly inform you of any deviations to ensure maximum availability of your application.

Data protection at a glance

The growth in the potential of mobile data use has also led to an increase in the requirements for data security. Eaton ensures that all current data protection regulations are observed and that your data are protected against any unauthorized access. For more information regarding cyber security, see: www.eaton.com/cybersecurity



Download white paper



easyE4 solutions

Ready for the future



"I'm getting the advice and support I need to implement cutting-edge system solutions."

The optimal design of your system architecture

LEVEL 1:
Eaton 'easy' stand-alone solution

The easyE4 allows for a wide range of clever applications of varying complexity. The control of simple tasks is performed by the base unit via the integrated inputs/outputs. The system can be tailored to the task at hand by means of the existing expansions. To this end, various expansion modules are available, which can be connected via a simple plug connector.

LEVEL 2
Eaton 'easy' system solution

For more complex tasks, additional devices can be connected to the base unit and the expansions via the network. Via the Ethernet and NET interfaces, up to eight easyE4 devices can communicate with each other within the same network cluster.

For larger networks, the easyE4 series offers the possibility of operating up to ten clusters—each with eight individual easyE4 devices—in parallel.

With the Modbus TCP protocol, it is even possible to use Eaton's XC300 as the central master-level control system for the easyE4 devices. And by connecting an Eaton HMI (e.g. the XV300), even the most demanding visualizations can be realized.

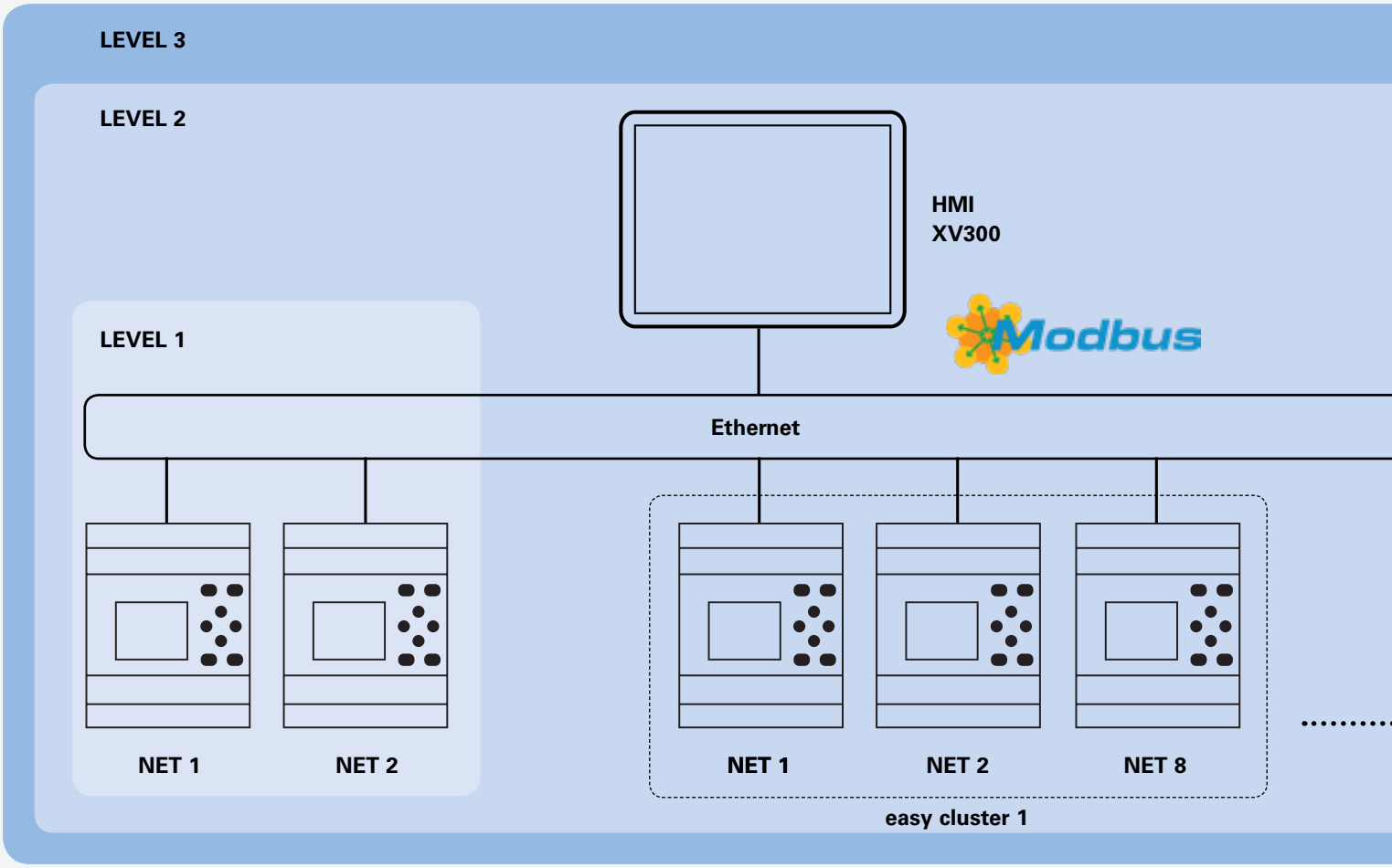

Successful entry to IIOT

LEVEL 3
Eaton ‘easy’ system solution with connection to the cloud

Industry 4.0 is already a reality in many companies. In addition to enhancements in data availability, it also facilitates process optimization along the entire value chain. Implementation requires intelligent, networked system components—also known as the Industrial Internet of Things (IIoT).

easyE4 enables integration into IIoT architectures via the built-in Ethernet interface. You can therefore transfer your data to the cloud via a router and then access it whenever you need it, from anywhere in the world.

Implementation of Industry 4.0

Industry 4.0 represents the fourth industrial revolution: Modern information and communication technologies have already made their way into production processes, where they facilitate the communication between humans, machines, plants, logistics, and products. In our white paper you will find more information about this exciting topic and how Eaton can help you with implementation.



Download WhitePaper

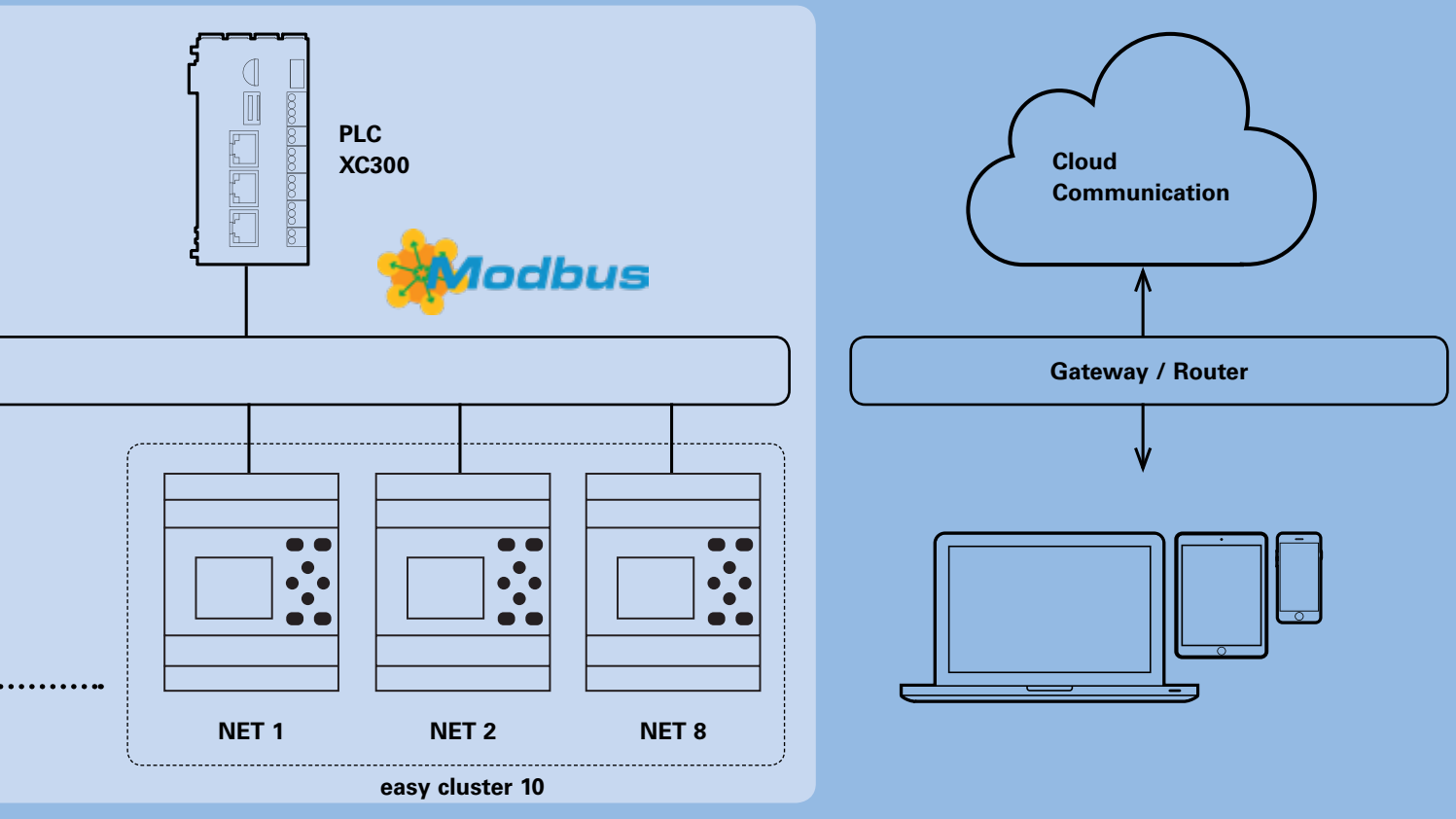

Technical data

Typ	EASY-E4-UC-12RC1	EASY-E4-UC-12RCX1	EASY-E4-UC-8RE1	EASY-E4-UC-16RE1	EASY-E4-DC-6AE1	EASY-E4-DC-12TC1	EASY-E4-DC-12TCX1	EASY-E4-DC-8TE1	EASY-E4-DC-16TE1
Article no.	197211	197212	197217	197218	197223	197213	197214	197219	197220
Type of device	Base unit	Base unit	Expansion unit	Expansion unit	Expansion unit	Base unit	Base unit	Expansion unit	Expansion unit
Inputs									
digital	8		4	8	-	8		4	8
can be used as analog inputs	4		-	-	6	4		-	-
Display	with Display	without Display	without Display	without Display	without Display	with Display	without Display	without Display	without Display
Rated operational voltage	12/24 V DC, 24 V AC				24 V DC				
Operating ambient temperature (°C)	-25 - +55				-25 - +55				
Dimensions (L x H x D)	71.5 x 90 x 58		35.5 x 90 x 58	71.5 x 90 x 58	35.5 x 90 x 58	71.5 x 90 x 58		35.5 x 90 x 58	71.5 x 90 x 58
Weight (kg)	0.2		0.2	0.2	0.2	0.2		0.2	0.2
Degree of protection	IP20								
Standards	EN 61000-6-2 EN 61000-6-3 IEC 60068-2-6 IEC 60068-2-27 IEC 60068-2-30 IEC 61131-2 EN 61010 EN 50178 cULus acc. to UL 61010 CSA C22.2 No.61010								

Dimensions

Basic device with display

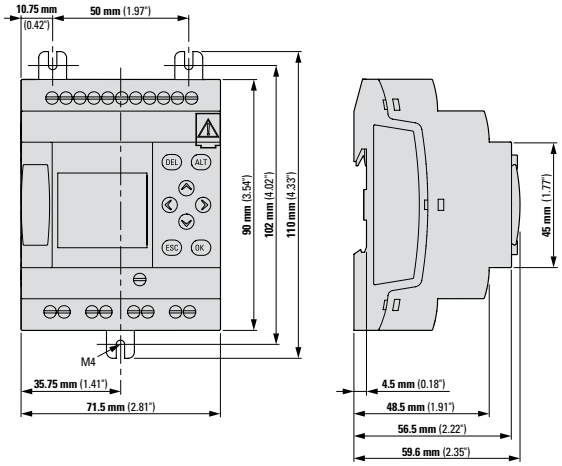

Basic device without display

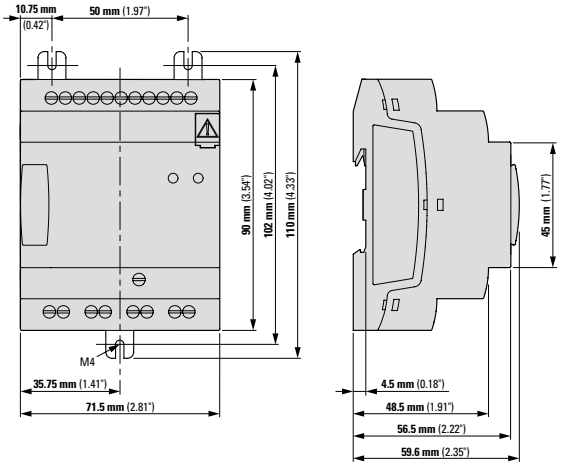

Slim expansion module

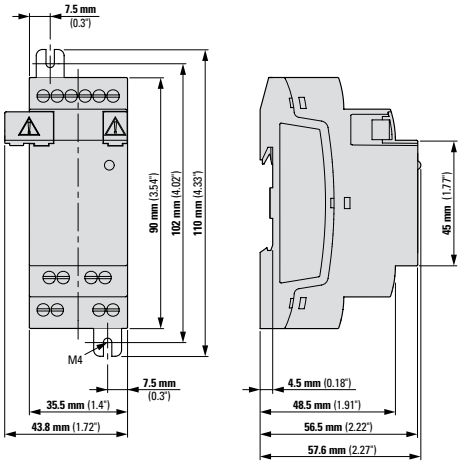

Large expansion module

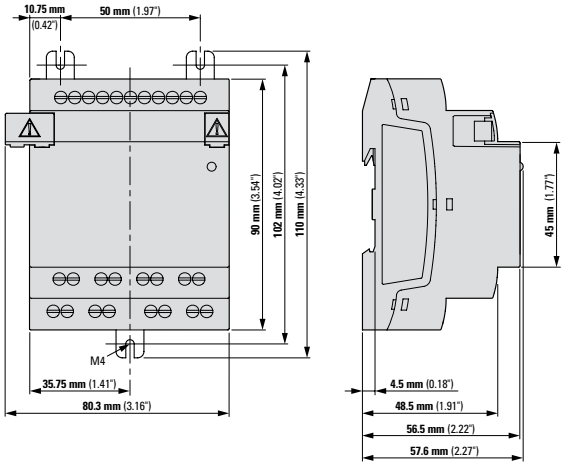

Ordering data

easyE4 Basic devices

Inscription	Input		Output		Features			Power supply	Typ Article no.
	digital	digital analog	Transistor	Relay (8 A)	Display + Keypad	Realtime clock	Ethernet		
Basis device 12/24 V DC,24 V AC, Display, Keypad Screw Terminal	4	4	-	4	•	•	•	12/ 24 V DC 24 V AC	EASY-E4-UC-12RC1 197211
Basis device 12/24 V DC,24 V AC Screw Terminal	4	4	-	4	-	•	•	12/ 24 V DC 24 V AC	EASY-E4-UC-12RCX1 197212
Basis device 24 V DC, Display, Keypad, Screw Terminal	4	4	4	-	•	•	•	24 V DC	EASY-E4-DC-12TC1 197213
Basic device 24 V DC Screw Terminal	4	4	4	-	-	•	•	24 V DC	EASY-E4-DC-12TCX1 197214
Basis device 100 - 240 V AC/DC Display, Keypad Screw Terminal	8	-	-	4	•	•	•	100- 240 V AC/DC	EASY-E4-AC-12RC1 197215
Basis device 100-240 V AC/DC Screw Terminal	8	-	-	4	-	•	•	100- 240 V AC/DC	EASY-E4-AC-12RCX1 197216

Expansion devices

Inscription	Input		Output			Power supply	Typ Articel-No.
	digital	analog	Relay (8 A)	Transistor	analog		
Digital Input/ Output 12/24 V DC, 24 V AC Screw Terminal	4	-	4	-	-	12/ 24 V DC 24 V AC	EASY-E4-UC-8RE1 197217
Digital Input/ Output 12/24 V DC, 24 V AC Screw Terminal	8	-	8	-	-	12/ 24 V DC 24 V AC	EASY-E4-UC-16RE1 197218
Transistor Input/ Output, 0.5 A Screw Terminal	4	-	-	4	-	24 V DC	EASY-E4-DC-8TE1 197219
Transistor Input/ Output, 0.5 A Screw Terminal	8	-	-	8	-	24 V DC	EASY-E4-DC-16TE1 197220
Digital Input/ Output 100/110/230/ 240 V AC Screw Terminal	4	-	4	-	-	100-240 V AC/DC	EASY-E4-AC-8RE1 197221
Digital Input/ Output 100/110/230/ 240 V AC Screw Terminal	8	-	8	-	-	100-240 V AC/DC	EASY-E4-AC-16RE1 197222
Analog Input/ Output; 0 - 10 V / 0/4 - 20mA, 12 bit, each channel configurable Screw Terminal	-	4	-	-	2	24 V DC	EASY-E4-DC-6AE1 197223
Temperature Input, 3 Wire, Pt100/1000/Ni1000, 12 bit, * [°C] or [°F], scalling, 12 bit, in 0,1 °, in 1°, 0 - 4095, 0 - 65535, Screw Terminal	-	4	-	-	-	24 V DC	EASY-E4-DC-4PE1 197224

* Measurement range selectable PT100, PT1000 -100 - +200°C, -100 - +400°C,-100 - +800°C, Ni1000 – 50 - +100°C, - 50 - +200°C

Software

Inscription	Typ Article no.
Programming software easySoft easyE range	EASYSOFT-SWLIC 197226

Accessories

Inscription	Connector	Caps	Typ Article no.
Spare parts package easyConnect	3	3	EASY-E4-CONNECT1 197225

easyE4 Startersets

Inscription	Typ Article no.
Basic device UC, patch cable, easySoft license code, easyE4 flyer	EASY-BOX-E4-UC1 197227
Basic device DC, patch cable, easySoft license code, easyE4 flyer	EASY-BOX-E4-DC1 197228

At Eaton, we're energized by the challenge of powering a world that demands more. With over 100 years experience in electrical power management, we have the expertise to see beyond today. From groundbreaking products to turnkey design and engineering services, critical industries around the globe count on Eaton.

We power businesses with reliable, efficient and safe electrical power management solutions. Combined with our personal service, support and bold thinking, we are answering tomorrow's needs today. Follow the charge with Eaton. **Visit eaton.eu.**

To contact an Eaton salesperson or local distributor/agent, please visit www.eaton.eu/electrical/customersupport

Changes to the products, to the information contained in this document, and to prices are reserved; so are errors and omissions. Only order confirmations and technical documentation by Eaton is binding. Photos and pictures also do not warrant a specific layout or functionality. Their use in whatever form is subject to prior approval by Eaton. The same applies to Trademarks (especially Eaton, Moeller, Cutler-Hammer, Cooper, Bussmann). The Terms and Conditions of Eaton apply, as referenced on Eaton internet pages and Eaton order confirmations.

Eaton Industries GmbH
Hein-Moeller-Str. 7–11
D-53115 Bonn/Germany

© 2018 by Eaton Corporation
All rights reserved
Publication No.: BR050009EN / CSSC-1179
October 2018

Powering Business Worldwide

Eaton is a registered trademark of Eaton Corporation.

All other trademarks are property of their respective owners.