Photoelectric Sensors

BOS R090K-PU-ID11-02
Order Code: BOS02AK

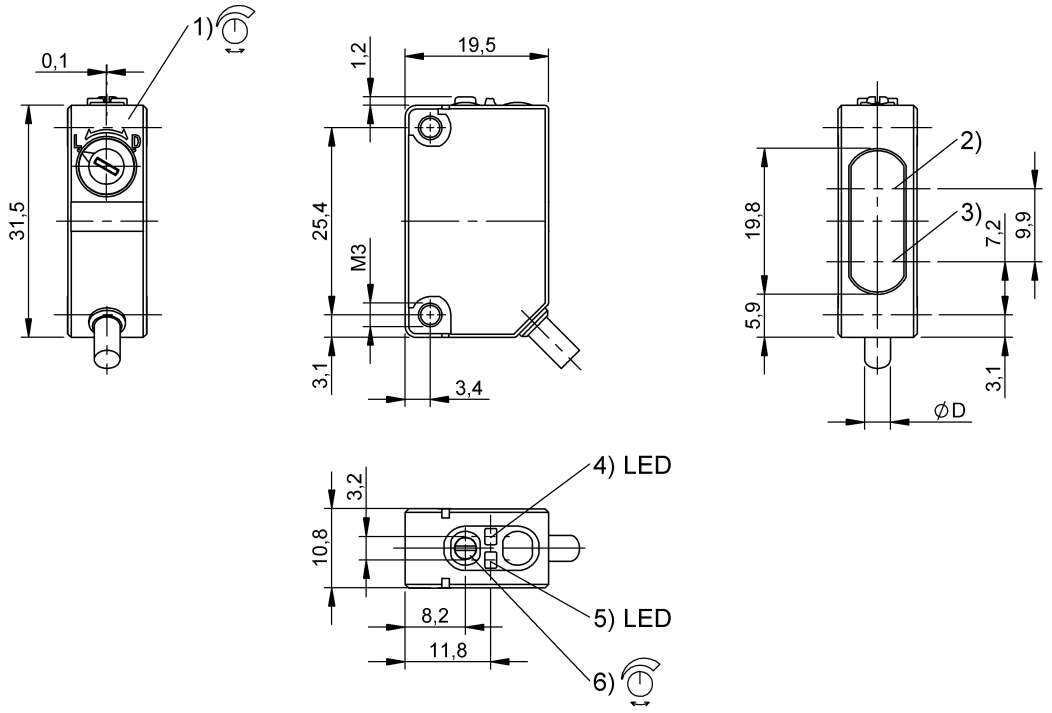

1) Mode settings, 2) Optical axis receiver, 3) Optical axis emitter, 4) Power indicator, 5) stability, 6) Sensitivity

Basic features

Approval/Conformity	cULus CE UKCA EAC WEEE
Principle of operation	Photoelectric sensor
Series	R090K
Style	Square Connection 45°

Display/Operation

Adjuster	Potentiometer 270° Rotary switch 2 positions
Display	Output function- LED yellow Stability - LED green
Setting	Sensitivity (Sn) Light-on/dark-on

Electrical connection

Cable diameter D	3.50 mm
Cable length L	2 m
Conductor cross-section	0.20 mm²
Connection	Cable, 2.00 m, PVC
Number of conductors	3
Polarity reversal protected	yes
Short-circuit protection	yes

Electrical data

No-load current Io max. at Ue	20 mA
Operating voltage Ub	10...30 VDC
Rated operating current Ie	100 mA
Rated operating voltage Ue DC	24 V
Ready delay tv max.	300 ms
Ripple max. (% of Ue)	10 %
Switching frequency	1000 Hz
Turn-off delay toff max.	0.5 ms
Turn-on delay ton max.	0.5 ms
Voltage drop Ud max. at Ie	2 V

Photoelectric Sensors

BOS R090K-PU-ID11-02
Order Code: BOS02AK

Environmental conditions

Ambient temperature	-30...55 °C
IP rating	IP67

Functional safety

MTTF (40 °C)	81 a

Interface

Switching output	PNP normally open/normally closed (NO/NC)

Material

Housing material	PC PBT
Material jacket	PVC
Material sensing surface	PMMA

Mechanical data

Dimension	10.7 x 32.7 x 19.5 mm
Mounting part	Screw M3
Tightening torque max.	0.5 Nm

Optical features

Ambient light max.	10000 Lux
Beam characteristic	Divergent
Light spot size	Ø 70 mm at 500 mm
Light type	LED infrared
Principle of optical operation	Diffuse sensor, energetic
Switching function, optical	dark-on/light-on
Wave length	880 nm

Range/Distance

Range	0...1000 mm
Rated operating distance Sn	1000 mm

Wiring Diagrams

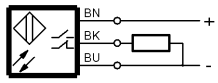

Opto Symbols

