EMERGENCY STOP ROPE PULL SWITCH

User Instructions

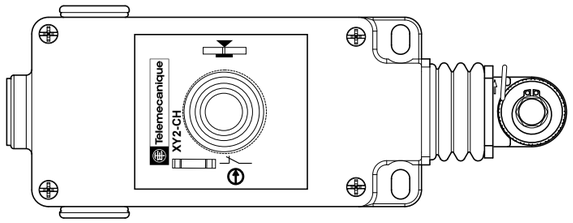

Note: you can download the complete user guide in different languages from our website at: www.tesensors.com

User Guide N°: S1B67119

en fr es de nl da
fi no pt el zh ru

We welcome your comments about this document. You can reach us by e-mail at: customer-support@tesensors.com

Schneider Electric Industries SAS
Head Office
35, rue Joseph Monier - CS 30323
F92500 Rueil-Malmaison Cedex
France
www.schneider-electric.com

http://qr.tesensors.com/XY0007

Accessories

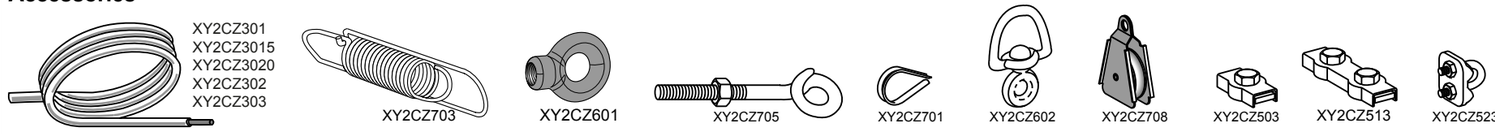

Instruction Sheet n°: S1B93343

Fig. 1 Installation

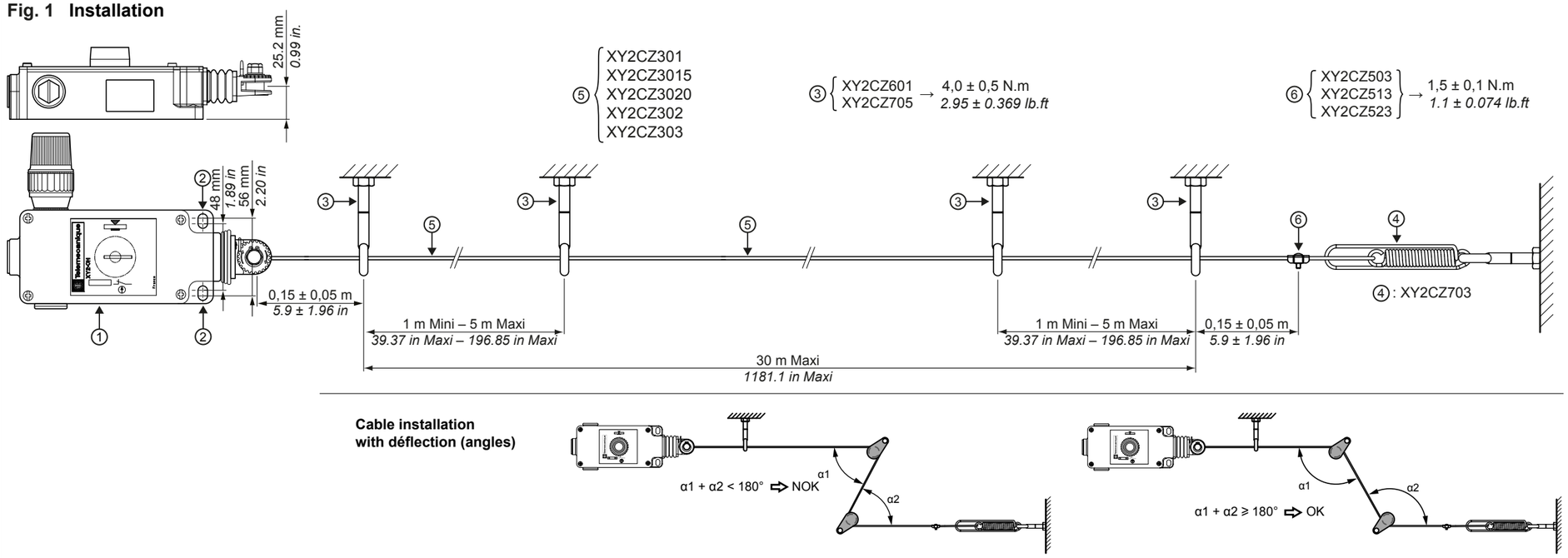

Fig. 2 Setting with the cable tensioner

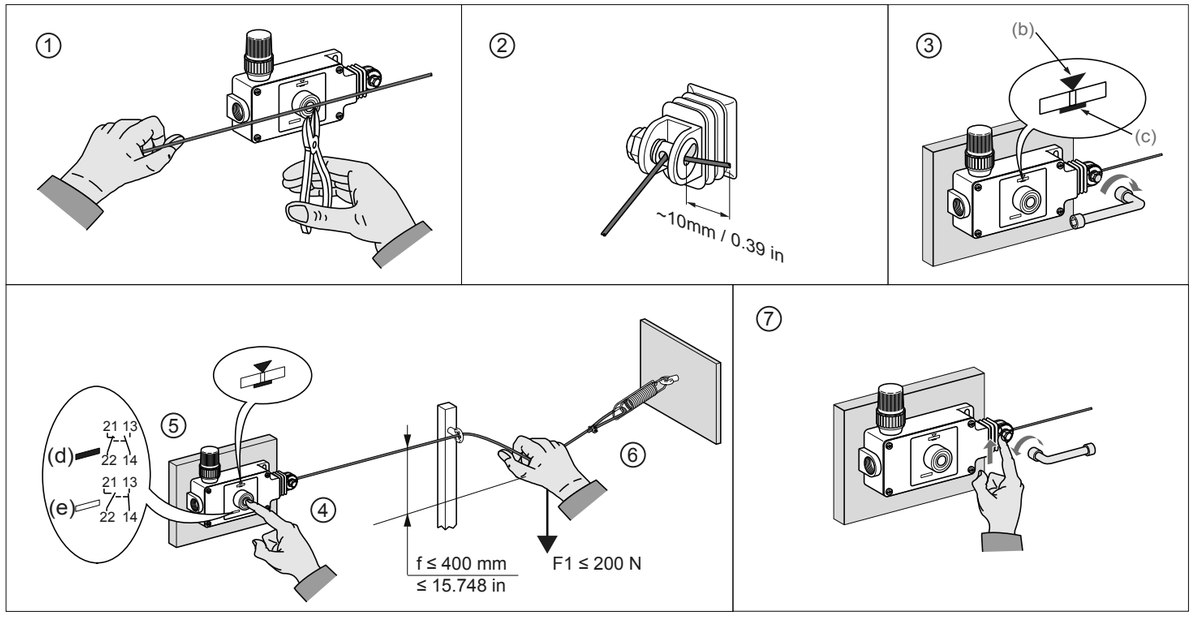

Fig. 3 ΔT= f(L)

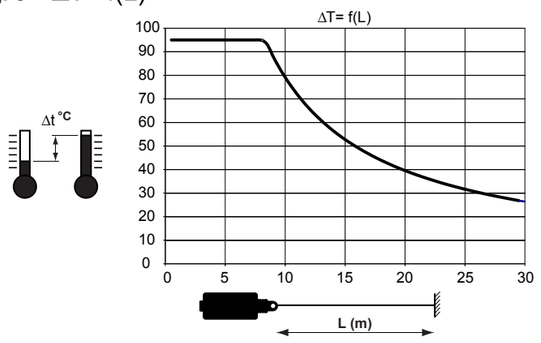

Fig. 4

	F1 (N) Ød (mm) 3,2	f (mm) Ød (mm) 3,2
2P/3P	28	230

Fig. 5a

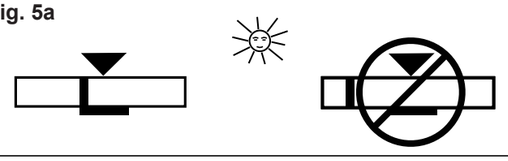

Fig. 5b

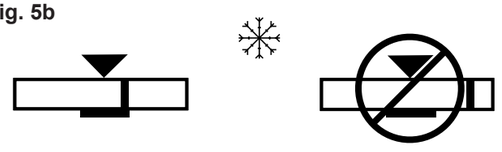

Fig. 6

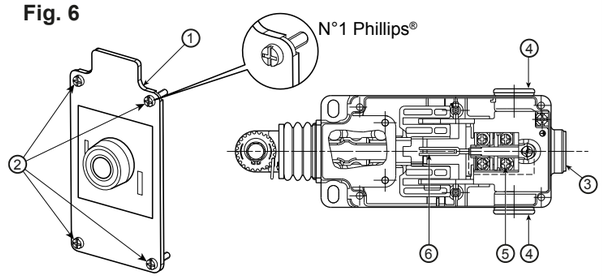

mm² 0,5…1,5 AWG 20…16	mm² 0,5…1,5 AWG 20…16	mm² 0,5…1,5 AWG 20…16	mm² 0,5…1,5 AWG 20…16	mm/in. 8 0.315

Fig. 9

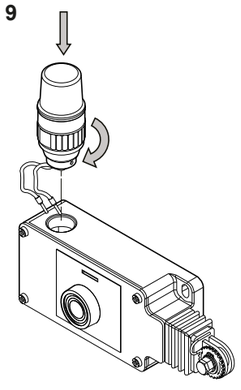

EMERGENCY STOP ROPE PULL SWITCHES

MECHANICAL ENDURANCE: 800,000 operating cycles

SAFETY INFORMATION:

Read these instructions carefully and look at the equipment to become familiar with the device before trying to install, operate, or maintain it. The following special messages may appear throughout this documentation or on the equipment to warn of potential hazards or to call attention to information that clarifies or simplifies a procedure.

⚠ The addition of this symbol to a Danger or Warning safety label indicates that an electrical hazard exists, which will result in physical injury if the instructions are not followed.

⚠ This is the safety alert symbol. It is used to alert you to potential physical injury hazards. Obey all safety messages that follow this symbol to avoid possible injury or death.

⚠ DANGER

DANGER indicates an imminently hazardous situation which, if not avoided, **will result in** death or serious injury.

WARNING

WARNING indicates a potentially hazardous situation which, if not avoided, **can result in** death or serious injury.

PLEASE NOTE

Electrical equipment should be installed, operated, serviced, and maintained only by qualified personnel. No responsibility is assumed by Schneider Electric for any consequences arising out of the use of this equipment.
A qualified person is one who has skills and knowledge related to the construction and operation of electrical equipment and the installation, and has received safety training to recognize and avoid the hazards involved.

⚠⚠ DANGER

RISK OF ELECTRICAL SHOCK, EXPLOSION OR ARC FLASH

• Switch off the power supply of the element acting as support.
• Take care not to damage the parts of the support that are normally powered.
• Visually inspect the good condition of the product.
• Use appropriate personal protective equipment (PPE) and follow the relevant working instructions for electrical environments. See NFPA 70E.
• Always use an appropriate electrical measuring device to confirm that the entire installation is powered down.

Failure to follow these instructions will result in death or serious injury.

INSTALLATION (fig. 1)

1. Mount the device ① solidly to a rigid support using cylindrical head screw M6 CHC, through holes ② (tightening torque = 4±0.5 Nm / *2.95±0.369 lb.ft*).
2. Mount the cable guides ③ firmly to rigid elements. Ensure that the product is anchored along the same axis as the cable.
3. Attach the end spring ④ to a rigid element.
4. Connect the strip cable ⑤ to the end spring ④ using a cable clamp ⑥.
5. Pass the cable ⑤ through all the cable guides ③.

⚠ DANGER

RISK OF UNINTENDED EQUIPMENT OPERATION

• Use Schneider Electric accessories only.
• Ensure that the product is anchored along the same axis as the cable.
• Mount the product to its support using 2 screws.
• An end spring must be used.
• Place the cable guides no less than 1 meter (*3.28 ft.*) and no more than 5 meters (*16.4 ft.*) apart from each other.
• Strip the cable at the cable clamp points.
• Remove all objects placed on the cable or masking it.
• Ensure that the cable is free to move.

Failure to follow these instructions will result in death or serious injury.

⚠ DANGER

RISK OF PHYSICAL INJURY

• Inspect the cable in its entirety to identify the reason for the emergency stop order before restarting.
• Always check the product functioning before restarting.

Failure to follow these instructions will result in death or serious injury.

WARNING

RISK OF FALL, COLLISION OR CRUSHING

• Secure the cable traction zone.
• Ensure that the cable is accessible along the entire traction zone.

Failure to follow these instructions can result in death, serious injury, or equipment damage.

NOTE:
1) The list of accessories and springs can be found in the Schneider Electric catalog.
2) A support or element may be described as "rigid" if it is capable of supporting a load of 2,000 N.

⚠⚠ DANGER

RISK OF ELECTRICAL SHOCK, EXPLOSION OR ARC FLASH

• Switch off the power supply of the device.
• Use appropriate personal protective equipment (PPE) and follow the relevant working instructions for electrical environments. See NFPA 70E.
• Always use an appropriate electrical measuring device to confirm that the entire installation is powered down.

Failure to follow these instructions will result in death or serious injury.

SETTING (fig. 2)

1. Cut the cable to the correct length at the push button, leaving sufficient strip length so that it can be wound up ① - correct: min. 1.5 turns.
2. Engage the cable on the tensioner ②.
3. Turn the adjustment nut until the index is centered ③. (b): index - (c): allowed operating zone (fig. 5a and 5b).
4. Arm the device by pressing the switch: you should hear a "click" ④.
5. Actuate the device by pulling the cable ⑥.
6. Repeat steps 4 and 5 once more.
7. Check the position of the index ⑤ and repeat steps 3 to 6 if required. (d): green - (e): yellow
8. To release the cable: push the hooking ring with your finger ⑦,then untighten the nut as required, based on the maximum allowable operating temperature variance (fig. 3) and take into account the table from the fig. 4.

WARNING

RISK OF FALL, COLLISION OR CRUSHING

Configure the device on the basis of the ambient temperature.

Failure to follow these instructions can result in death, serious injury, or equipment damage.

NOTE: You can compensate for expansion/contraction of the cable by adjusting the configuration to take account of temperature variations:
• Fig.5a: anticipation of a fall in temperature.
• Fig.5b: anticipation of a rise in temperature.

⚠ DANGER

RISK OF UNINTENDED EQUIPMENT OPERATION

Check that the device, cable and accessories are securely mounted in place.

Failure to follow these instructions will result in death or serious injury.

⚠ DANGER

RISK OF PHYSICAL INJURY

Always check the product functioning before restarting.

Failure to follow these instructions will result in death or serious injury.

⚠⚠ DANGER

RISK OF ELECTRICAL SHOCK, EXPLOSION OR ARC FLASH

• Switch off the power supply of the element acting as support.
• Use an IP65 cable gland.
• Protect the installation against power surges.
• Use appropriate personal protective equipment (PPE) and follow the relevant working instructions for electrical environments. See NFPA 70E.
• Always use an appropriate electrical measuring device to confirm that the entire installation is powered down.

Failure to follow these instructions will result in death or serious injury.

WIRING (fig. 6)

1. Remove the cover from the device ① by unscrewing the four screws ②.
2. Remove the cap ③ or unscrew the blanking plug ④ or unscrew the blanking plug.
3. Attach the cable gland (not supplied).
4. If required, re-attach the blanking plug ④ and its nut into the empty hole (tightening torque = 1±0.1 Nm / *0.73±0.07 lb.ft*).
5. Connect the electrical cables to the yoke screw terminals ⑤. In case of pilot lights (not included), pass the cables through the hole (fig.9), fix the pilot light and after that connect the cables to the yoke screw terminals. (tightening torque = 1±0.2 Nm / *0.73±0.15 lb.ft*).
6. Check that there are no cables passing through the reset area ⑥.
7. Mount the cover onto the device ① using the four screws ②. (tightening torque = 1.5±0.1 Nm / *1.1±0.369 lb.ft*).
8. Install a type gG 10A protective fuse for XY2CH 2 contacts.
   Install a type gG 6A protective fuse for XY2CH 3 contacts.

⚠ DANGER

RISK OF UNINTENDED EQUIPMENT OPERATION

• Do not remove non-detachable components.
• Ensure that the reset switch zone remains empty.
• Check that none of the device components is deformed by an electrical cable once the cover is closed.
• Check that the cover is securely closed.

Failure to follow these instructions will result in death or serious injury.

⚠ DANGER

RISK OF PHYSICAL INJURY

Always check the product functioning before restarting.

Failure to follow these instructions will result in death or serious injury.

MAINTENANCE, RESTARTING AND CHECKING

Once you have engaged the cable, inspect the installation along the full length of the cable to identify the reason for the emergency stop order before resetting the XY2CH.
The XY2CH and its cable and accessories must be periodically checked depending on the outside pollution level and the number of operations.

During scheduled maintenance operations, check:
• The tightening torque of the XY2CH screws and components and other accessories (cable clamp, cable guide, etc.) at least once per year.
• The condition of the cable and other associated elements (cable clamp, cable guide, etc.). The cable sheath may be worn, but this wear should not prevent the cable from moving freely within the accessories. If the sheath is torn or contains holes, change the cable.
• The condition of the XY2CH bellows. There must be no holes, slits or cracks in the bellows. If the bellows are damaged, replace the XY2CH.

⚠⚠ DANGER

RISK OF ELECTRICAL SHOCK, EXPLOSION OR ARC FLASH

Switch off the power supply of the device.

Failure to follow these instructions will result in death or serious injury.

⚠ DANGER

RISK OF PHYSICAL INJURY

• Inspect the cable in its entirety to identify the reason for the emergency stop order before restarting.
• Always check the product functioning before restarting.

Failure to follow these instructions will result in death or serious injury.

WARNING

RISK OF UNINTENDED EQUIPMENT OPERATION

• Check the XY2CH installation and setting according to the information contained in this instruction manual.
• Ensure that the cable is accessible along the entire traction zone.
• Conduct an inspection as described in the chapter entitled "Maintenance, restarting and checking" after each maintenance operation and before restarting the installation.

Failure to follow these instructions can result in death, serious injury, or equipment damage.

DISMANTLING / RECYCLING

⚠⚠ DANGER

RISK OF ELECTRICAL SHOCK, EXPLOSION OR ARC FLASH

Switch off the power supply of the device.

Failure to follow these instructions will result in death or serious injury.

⚠ DANGER

RISK OF PHYSICAL INJURY

• Dismantle the cable before the XY2CH.
• Dismantle the internal components of the XY2CH carefully.

Failure to follow these instructions will result in death or serious injury.

NOTE: The internal mechanism and the electrical contact blocks are fitted with springs which can result in the projection of parts