# E40495

## Process adapter clamp DIN 32676 series A

ADAPT DIN32676-A DN80

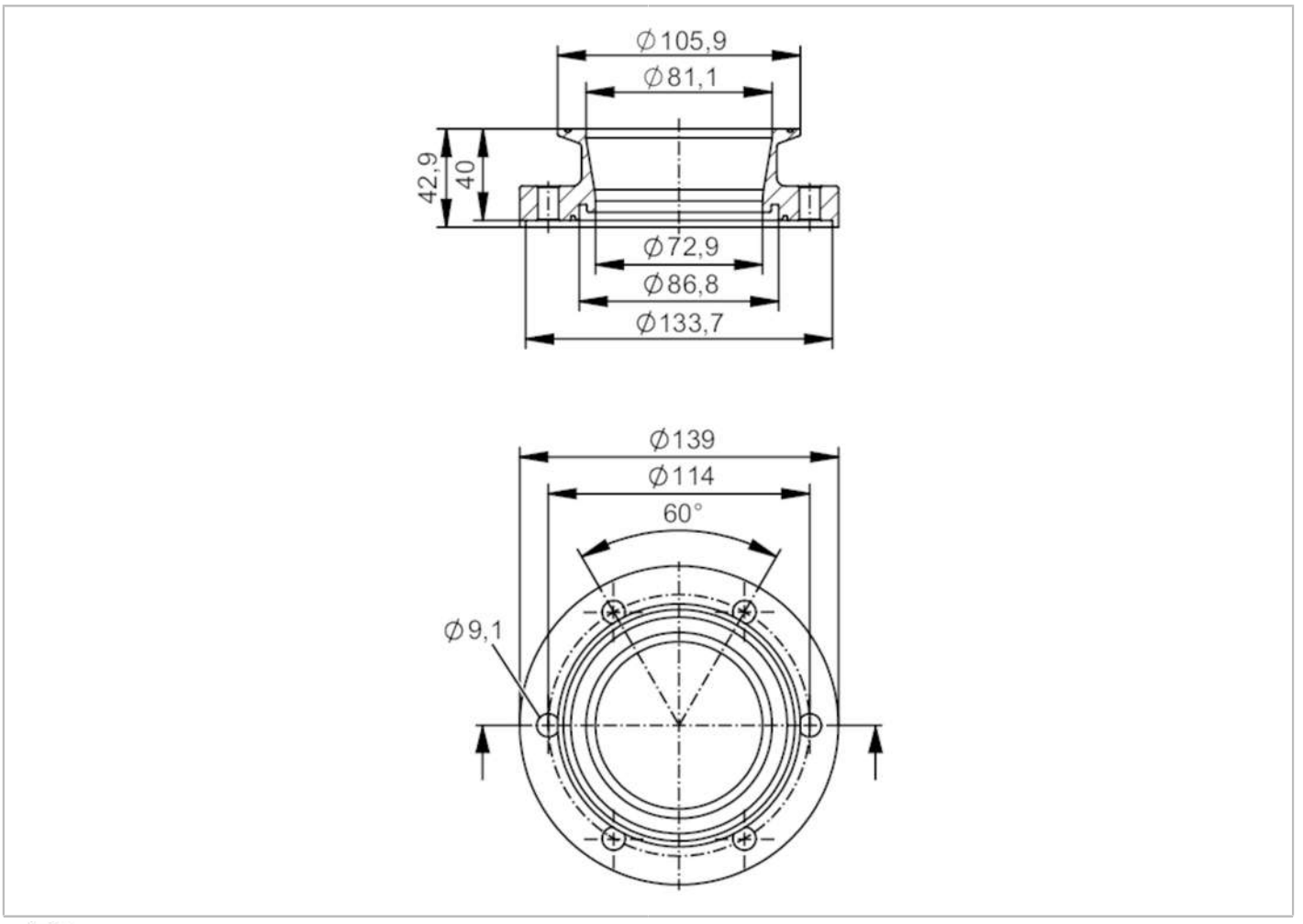


EC 1935/2004 FCM FDA

| | | | |
|---|---|---|---|
| **Application** | | | |
| Design | | for volumetric flow meters SMF | |
| Application | | food and beverage industry; hygienic systems | |
| Pressure rating | | 16 bar | 1.6 MPa |
| **Tests / approvals** | | | |
| Pressure Equipment Directive | | A possible classification to PED depends on the application and has to be carried out by the user / operator. | |
| Safety instructions | | The compatibility between medium and product material has to be checked in all applications. | |
| **Mechanical data** | | | |
| Weight | [g] | 4130 | |
| Materials | | stainless steel (316L/1.4404) | |
| Nominal diameter | | DN80 (3“) | |
| Sensor connection | | ifm-specific device flange | |
| Process connection | | Clamp DIN 32676 series A (ISO) | |
| Process connection suitable for pipe standard | | (DIN EN 10357 series A); (DIN 11866 series A); (DIN 11850 series 2) | |
| Surface characteristics Ra/Rz of the wetted parts | | Ra ≤ 0.4 µm | |

# E40495

## Process adapter clamp DIN 32676 series A

ADAPT DIN32676-A DN80

| Accessories | |
|---|---|
| Items supplied | screws 12 |
| **Remarks** | |
| Pack quantity | 2 pcs. |