BANNER®
the photoelectric specialist

MINI-BEAM® SM312LV, SM312LVAG and SM312LP

Self-contained DC-operated Retroreflective Mode Sensors

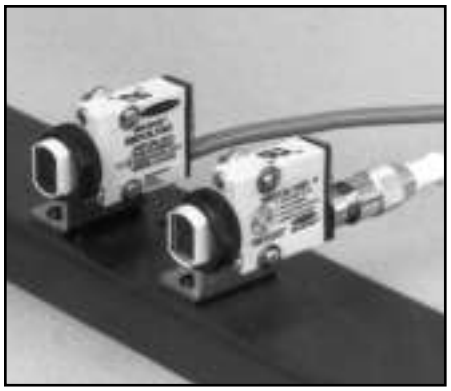

- Compact, modulated, self-contained retroreflective sensors for 10-30V dc operation
- Choose standard visible model for highest excess gain and greatest range, or polarized models for detection of shiny objects
- Includes Banner's exclusive AID™ alignment system; US patent number 4356393
- Switch-selectable for light operate or dark operate
- Highly repeatable 1 millisecond response
- Both sourcing and sinking outputs (150 mA max. each); continuous overload and short-circuit protected
- Physically and electrically interchangeable with 18 mm barrel-type photoelectrics

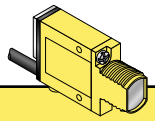

NOTE: Retroreflective range is specified using one model BRT-3 retroreflector (3" diameter). Actual sensing range may be more or less than specified, depending upon the efficiency and reflective area of the retroreflector(s) used. See the Banner Photoelectric Sensors catalog for more information on available retroreflectors.



Visible red, 650 nm

Non-Polarized *Polarized*

DC MINI-BEAM Retroreflective Mode Models

Models*	Range	Cable	Supply Voltage	Output Type	Excess Gain	Beam Pattern
Non-Polarized						
SM312LV **SM312LVQD**	5 m (15')	2 m (6.5') 4-Pin Euro QD	10-30V dc	Bipolar NPN/PNP	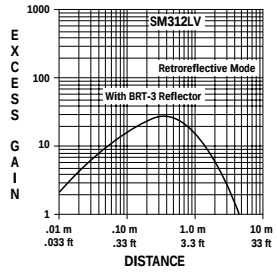	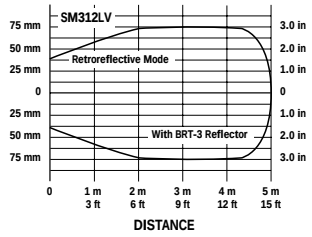
Polarized						
SM312LVAG **SM312LVAGQD**	50 mm to 2 m (2" to 7')	2 m (6.5') 4-Pin Euro QD	10-30V dc	Bipolar NPN/PNP	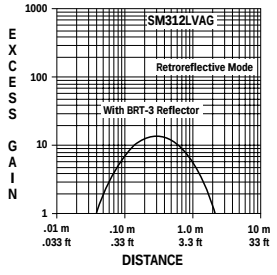	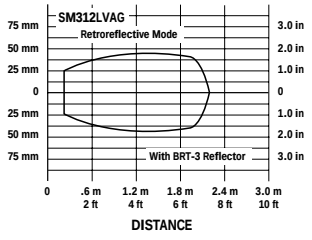
Extended Range Polarized						
SM312LP **SM312LPQD**	10 mm to 3 m (0.4" to 10')	2 m (6.5') 4-Pin Euro QD	10-30V dc	Bipolar NPN/PNP	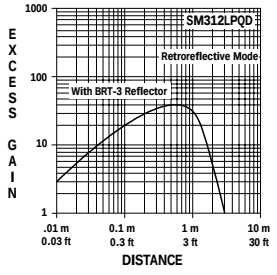	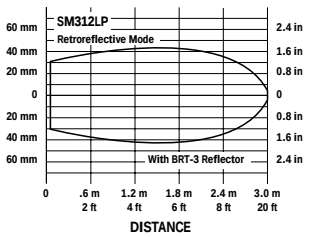

*See notes on page 3.

MINI-BEAM Installation and Alignment

Proper operation of these sensors requires that they be mounted securely and aligned properly. For best results, final-mount these sensors in an 18 mm hole by their threaded barrel or use one of the available mounting brackets, (see pages 6 - 7).

1) Begin with the sensor at the desired distance from the retro target and at the approximate position where it will be mounted. An object at the sensing position should pass through the “core” of the sensor’s light beam.

2) Apply power to the sensor, and advance the sensor’s 15-turn GAIN control to maximum (clockwise end of rotation). If the sensor is “seeing” the reflected light beam, the alignment LED should be “on”. Move the sensor up-down-right-left to obtain the fastest receiver LED pulse rate. (alternatively, the retro target may be moved.) If a pulse is not observable (too fast to count), reduce the GAIN control (counterclockwise rotation) to obtain a countable pulse rate. (As an aid to alignment, it may be necessary to further reduce the strength of the light signal by tape-masking a portion of the retroreflective target area.)

3) Repeat the alignment motions after each GAIN reduction. When you have found the sensor orientation that produces the fastest pulse rate, mount the sensor (or reflector) solidly in that position. Increase the receiver GAIN to maximum. Test the system by placing the object to be detected into the sensing position. The indicator should go “off”. If an “LV” model sensor’s indicator does not go “off” at this point, the sensor is reacting to light reflected from the object (“proxing”).

   If proxing occurs, reduce the GAIN setting until the alignment indicator goes “off”, plus two additional full turns. Remove the object from the sensing position and check that the alignment indicator LED comes “on” and pulses at a rate of at least two flashes per second. Confirm that the LED goes “off” when the object is replaced.

   Proxing can be avoided by mounting the sensor so that it’s light beam is not perpendicular to any flat reflective surface on the object to be detected (an angle of 10 to 15 degrees is usually sufficient). Also, at distances of a few feet or more, using more than one reflector may increase sensing contrast between object-present and object-absent.

Retroreflective Mode Alignment

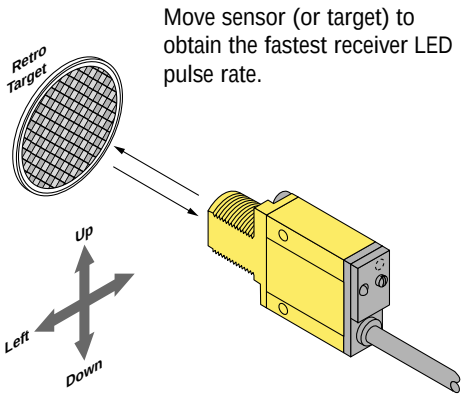

Move sensor (or target) to obtain the fastest receiver LED pulse rate.

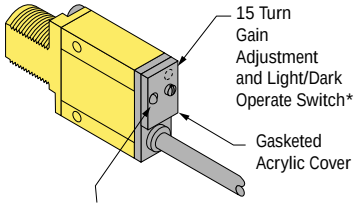

“AID” Indicator LED Lights when the sensor sees the reflection of its own modulated light and pulses at a rate proportional to the received light signal.

*** Note regarding Light/Dark operate switch:**
- Turn switch *fully* clockwise for light operate (sensor outputs conduct when sensing light is received)
- Turn switch *fully* counterclockwise for dark operate (sensor outputs conduct when sensing light is not received)

MINI-BEAM DC Product Specifications	
Supply Voltage and Current	10 to 30V dc (10% maximum ripple) at less than 25mA (exclusive of load)
Supply Protection Circuitry	Protected against reverse polarity and transient voltages
Output Configuration	Bipolar: One current sourcing (PNP) and one current sinking (NPN) open-collector transistor
Output Rating	150mA maximum each output at 25°C, derated to 100mA at 70°C (derate ≈1mA per °C) **Off-state leakage current** less than 1 microamp **Output saturation voltage** (PNP output) less than 1 volt at 10mA and less than 2 volts at 150mA **Output saturation voltage** (NPN output) less than 200 millivolts at 10mA and less than 1 volt at 150mA
Output Protection Circuitry	Protected against false pulse on power-up and continuous overload or short-circuit of outputs
Output Response Time	Sensors will respond to either a "light" or a "dark" signal of 1 millisecond or longer duration, 500Hz max. 0.3 millisecond response modification is available. See Note below. 100 millisecond delay on power-up; outputs do not conduct during this time.
Repeatability	0.3 milliseconds. Response time and repeatability specifications are independent of signal strength.
Adjustments	LIGHT/DARK OPERATE select switch, and 15-turn slotted brass screw GAIN (sensitivity) adjustment potentiometer (clutched at both ends of travel). Both controls are located on rear panel of sensor and protected by a gasketed, clear acrylic cover.
Indicators	Exclusive, patented Alignment Indicating Device system (AID™, US patent #4356393) lights a rear-panel mounted red LED indicator whenever the sensor sees a "light" condition, with a superimposed pulse rate proportional to the light signal strength (the stronger the signal, the faster the pulse rate).
Construction	Reinforced PBT thermoplastic polyester housing, totally encapsulated, o-ring sealing, acrylic lenses, and stainless steel screws.
Environmental Rating	Meets NEMA standards 1, 2, 3, 3S, 4, 4X, 6, 12, and 13; IEC IP67
Connections	PVC-jacketed 4-conductor 2 m (6.5') or 9 m (30') cables, or 4-pin Euro-style quick disconnect (QD) fitting are available. QD cables are ordered separately. See page 8.
Operating Temperature	**Temperature:** -20° to +70° C (-4° to +158° F) **Maximum relative humidity:** 90% at 50° C (non-condensing)
Application Notes	The NPN (current sinking) output of dc MINI-BEAM sensors is directly compatible as an input to Banner logic modules, including all non-amplified MAXI-AMP and MICRO-AMP modules. MINI-BEAMs are TTL compatible.
Certifications	CE, CSA®, UL®

NOTES:

i) 9 m (30') cables are available by adding suffix **"W/30"** to the model number of any cabled sensor (e.g., **SM312LP W/30**).

ii) Standard models have 1 millisecond output response; models with 0.3 millisecond (300 microsecond) response are available by adding suffix "**MHS**" to the model number (e.g., **SM312LPMHS**). Note that this modification reduces the maximum operating temperature to +50º C (122º F).

iii) A 150 mm (6") long pigtail cable with attached QD connector is available by adding suffix "QDP" to the model number (e.g., **SM312LPQDP**).

iv) A model with a QD connector requires an optional mating cable (see accessories, page 8).

MINI-BEAM DC Hookup Diagrams

DC Sensors with Attached Cable

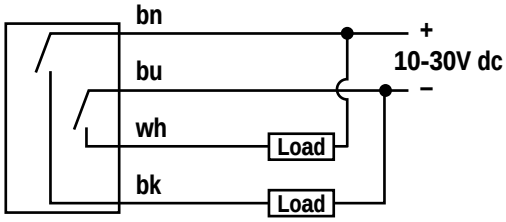

DC Sensors with Quick Disconnect (4-Pin Euro-Style)

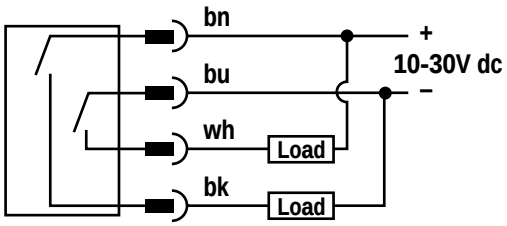

4-Pin Euro-Style Pin-out (Cable Connector Shown)

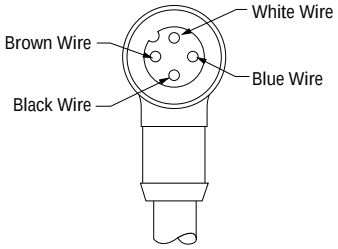

Quick Disconnect (QD) Option

DC MINI-BEAM sensors are sold with either a 2 m (6.5') or a 9 m (30') attached PVC-covered cable, or with a 4-pin Euro-style QD cable fitting.

DC QD sensors are identified by the letters “QD” in their model number suffix. Mating cables for QD MINI-BEAM sensors are model MQDC-415 (straight connector) or MQDC-415RA (right-angled connector). Cables are supplied in a standard length of 5 m (15'). For more information on QD cables, see page 8.

MINI-BEAM Dimension Information

MINI-BEAM DC Sensor with Integral Cable

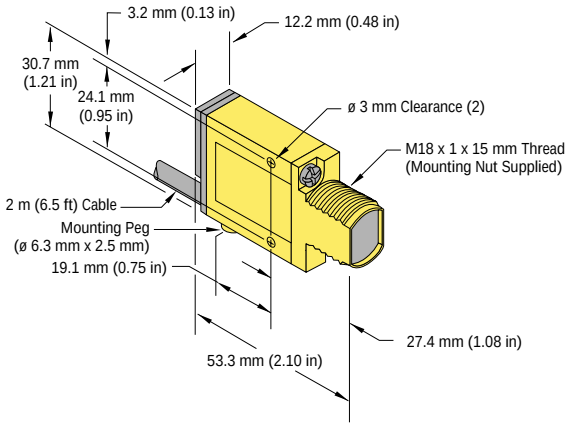

MINI-BEAM DC Sensor with Quick-Disconnect

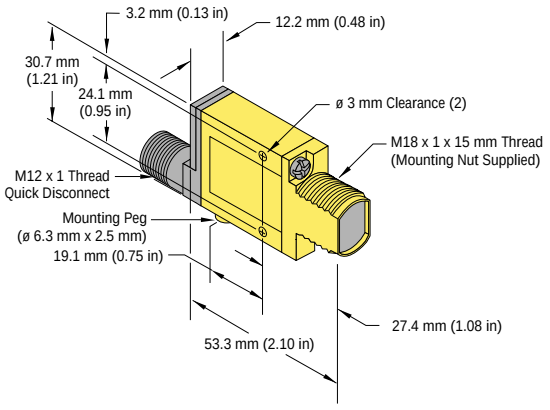

MINI-BEAM Modifications

Model Suffix	Modification	Description		Example of Model Number
W/30	9 meter (30') cable	All MINI-BEAM sensors may be ordered with an integral 9 m (30') cable in place of the standard 2 m (6.5') cable		SM312LP W/30
MHS	Modified for High Speed	Standard dc MINI-BEAM sensors with 1 millisecond output response may be modified for 0.3 millisecond (300 µs) response. NOTE: Faster response comes at the expense of lower excess gain. Also, operating temperature range becomes -20° to +50°C (-4° to +122°F)		SM312LPMHS
QDP	Pigtail Quick Disconnect	All MINI-BEAMs may be built with a 150 mm (6") long integral cable which is terminated with the appropriate QD connector.		SM312LPQDP

Replacement Lens Assemblies

MINI-BEAM lens assemblies are field-replaceable.

Model	Description	
UC-300AG	Replacement lens for LVAG	
UC-300L	Replacement lens for LV	
UC-300LP	Replacement lens for LP	

Retroreflective Targets

Banner offers a wide selection of high-quality retroreflective targets. See the Banner Photoelectric Sensors Catalog.

Mounting Brackets

Model	Description	Dimensions
SMB312S	Stainless steel 2-axis, side mounting bracket	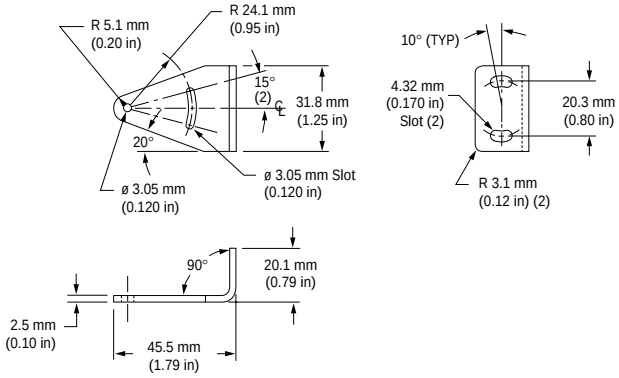
SMB312B	Stainless steel 2-axis, bottom mounting bracket Includes SMB12F (below)	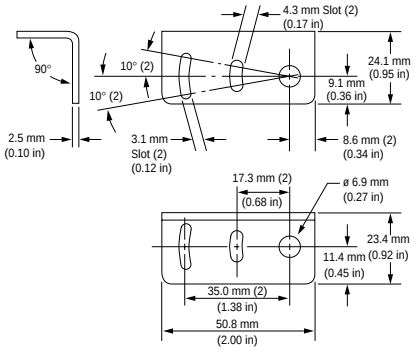
SMB312F	• A mounting foot used to attach to bottom surface of any MINI-BEAM sensor to a flat mounting surface • Attaches securely beneath the MINI-BEAM sensor's barrel using a special extra-long upper cover mounting screw (supplied)	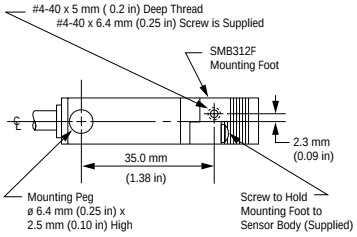

Mounting Brackets

Model	Description	Dimensions
SMB312PD	• Stainless steel 18 mm barrel-mounting bracket	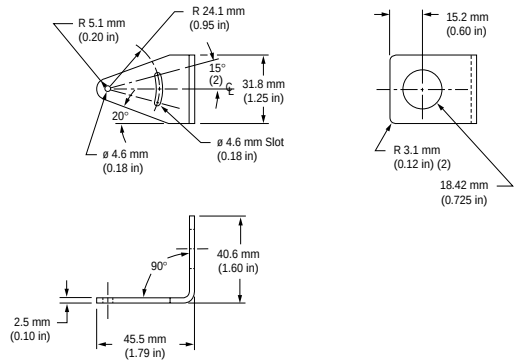
SMB18C	• 18 mm split clamp black thermoplastic polyester bracket • Stainless steel mounting hardware included	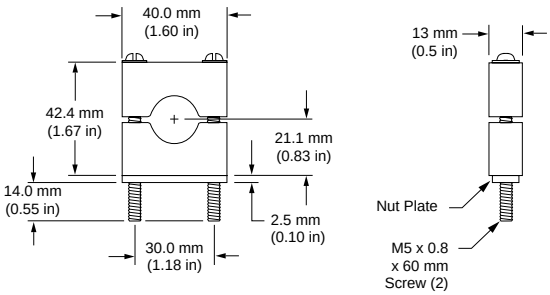
SMB18S	• 18 mm swivel, black thermoplastic polyester bracket • Stainless steel mounting hardware included	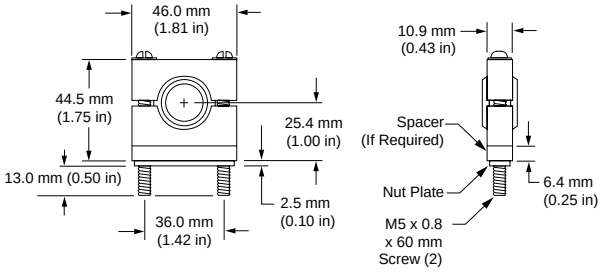

MINI-BEAM® Sensors SM312LV, SM312LVAG and SM312LP

Euro-Style Quick-Disconnect Cables

Cable: PVC jacket, polyurethane connector body, chrome-plated brass coupling nut
Conductors: 22 or 20 AWG high-flex stranded, PVC insulation, gold-plated contacts
Temperature: -40° to +90°C (-40° to +194°F)
Voltage Rating: 250V ac/300V dc

Style	Model	Length	Used with:	Dimensions	Pin-out
4-Pin Straight	**MQDC-406** **MQDC-415** **MQDC-430**	2 m (6.5') 5 m (15') 9 m (30')	• MINI-BEAM dc SM312 series	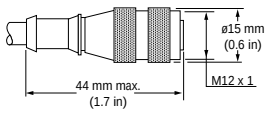	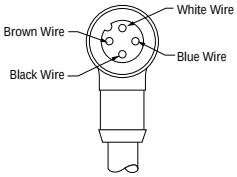
4-Pin Right-angle	**MQDC-406RA** **MQDC-415RA** **MQDC-430RA**	2 m (6.5') 5 m (15') 9 m (30')		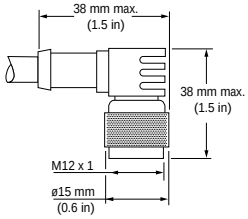	

BANNER®
the photoelectric specialist

WARNING . . . Not To Be Used for Personnel Protection

Never use this product as a sensing device for personnel protection. Doing so could lead to serious injury or death.

This product does NOT include the self-checking redundant circuitry necessary to allow its use in personnel safety applications. A sensor failure or malfunction can cause either an energized or de-energized sensor output condition. Consult your current Banner Safety Products catalog for safety products which meet OSHA, ANSI and IEC standards for personnel protection.

WARRANTY: Banner Engineering Corp. warrants its products to be free from defects for one year. Banner Engineering Corp. will repair or replace, free of charge, any product of its manufacture found to be defective at the time it is returned to the factory during the warranty period. This warranty does not cover damage or liability for the improper application of Banner products. This warranty is in lieu of any other warranty either expressed or implied.