Levelling Feet



Applications

- Gensets
- Engines
- Tooling Machinery
- Pumps
- HVAC
- Special Equipment
- General Machinery

The "ZAL" product is quite unique within the Levelling Feet market, as it can accommodate significant loads - and is therefore useful for large equipment installation.

It can accept loads up to 4,000Kg each - subject to the option selected.

The Threads are Metric-Fine, which enables the Feet to be finely adjusted to ensure the load is totally level and safe.

Material Breakdown: Plates - Steel DC04 (UNI EN 10130)
Washers - Steel DD12 (UNI EN 10111)
Nuts - Resistance Class 4 Bolts - Resistance Class 4.8
Other Metal Components - 11SMnPb 37 (UNI EN 10087)
Natural Rubber NR
Finish - Zinc plated in accordance with CE standards CHROME VI free, white
Stiffness Tolerance +/- 20%

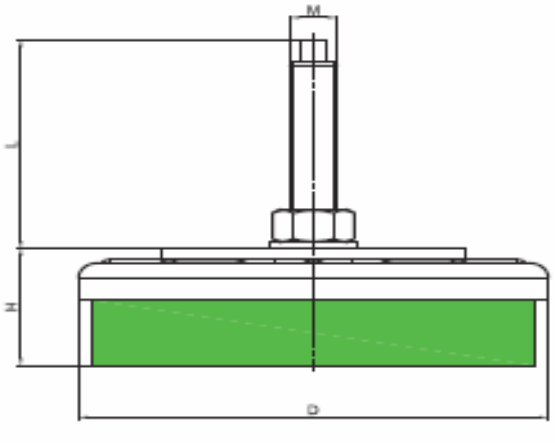

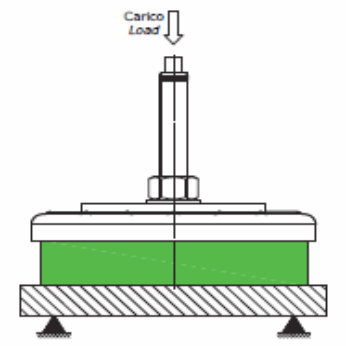

RS Ref:	Fibet Ref:	Hardness (IRHD)	D (mm)	H (Min.) (mm)	H (Max.) (mm)	M (Metric Fine)	L (Min.) (mm)	L (Max.) (mm)	Average Stiffness (daN/mm)	Max. Load (daN)	Max. Deflection (mm)
201-2366	ZAL8035V120	80	80	35	46	M12 x 1.25	87	98	250	500	2
742-6840	ZAL12040V120	80	120	40	51	M16 x 1.5	93	104	400	1000	2.5
201-2363	ZAL16050V170	80	160	50	63	M20 x 1.5	125	138	900	2000	2.2
201-2365	ZAL20060V170	80	200	60	73	M20 x 1.5	125	138	1500	4000	2.7