NU 206 ECP

Popular item
SKF Explorer

Dimensions

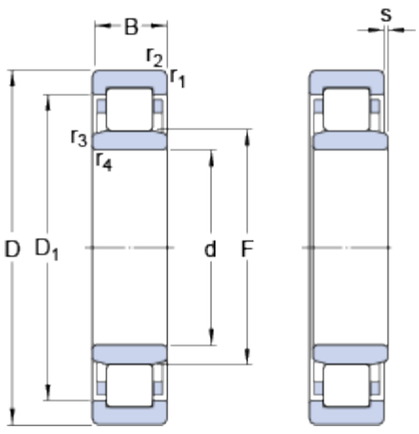

d		30	mm
D		62	mm
B		16	mm
D_1	≈	52.08	mm
F		37.5	mm
$r_{1,2}$	min.	1	mm
$r_{3,4}$	min.	0.6	mm
s	max.	1.3	mm

Abutment dimensions

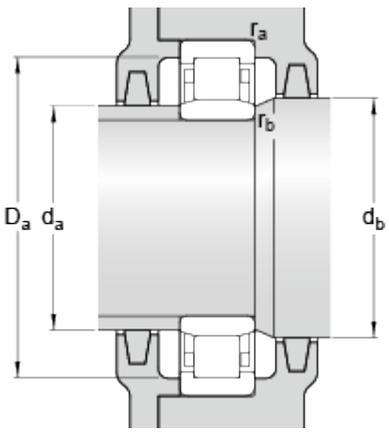

d_a	min.	34.3	mm
d_a	max.	36.1	mm
d_b	min.	39	mm
D_a	max.	55.9	mm
r_a	max.	1	mm
r_b	max.	0.6	mm

Calculation data

Basic dynamic load rating	C	44	kN
Basic static load rating	C_0	36.5	kN
Fatigue load limit	P_u	4.5	kN
Reference speed		13000	r/min
Limiting speed		14000	r/min
Calculation factor	k_r	0.15	
Limiting value	e	0.2	
Axial load factor	Y	0.6	

Mass

Mass bearing	0.2	kg

Associated products

Angle ring	HJ 206 EC