Brand of NTN corporation

Technical data

UCFCE214

Bearing units



KIT CONTENT

UC214G2, FCE214

VISUAL (S)

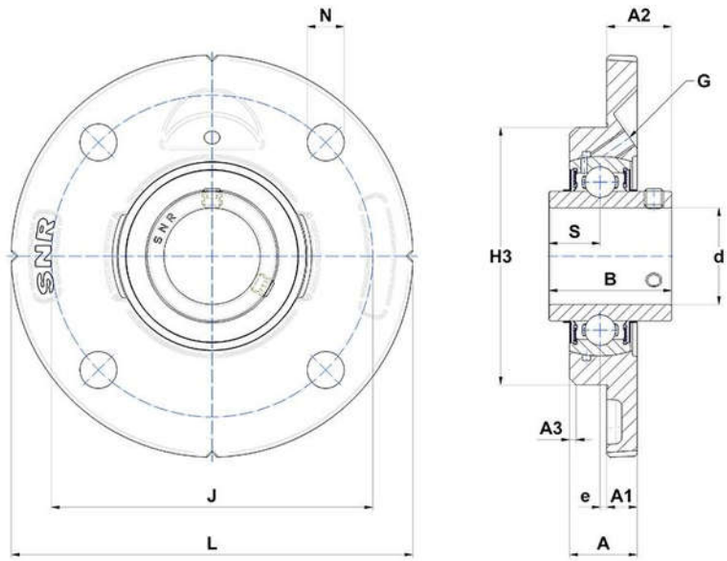

PRODUCT DEFINITION

Brand	SNR
A - Housing height	33 mm
A1 - Housing foot height / flange height	18 mm
A2 - Total height from mounting surface	44,4 mm
A3 - Centering depth / chamfer dimension	6 mm
B - Width of Inner Ring	74,6 mm
d - Shaft diameter	70 mm

PRODUCT DEFINITION	
G - Grease fitting	R1/8"
H3 - Centering dia	150 mm
J - Mounting holes distance	177 mm
L - Housing width / diameter	215 mm
N - Mounting hole dimension	18 mm
S - Distance front side/bearing centre	30,2 mm

PRODUCT PERFORMANCE	
C - Dynamic load rating	62000000 mN
C0 - Static load rating	45000000 mN
Operating temperature min.	253,15 °K
Operating temperature max.	373,15 °K

OTHER FEATURES	
Mass	5,06 kg
Recommended tightening torque for set screw	33 N-m