E11121

Mounting set for position sensors

MOUNTING BRACKET ANGLED

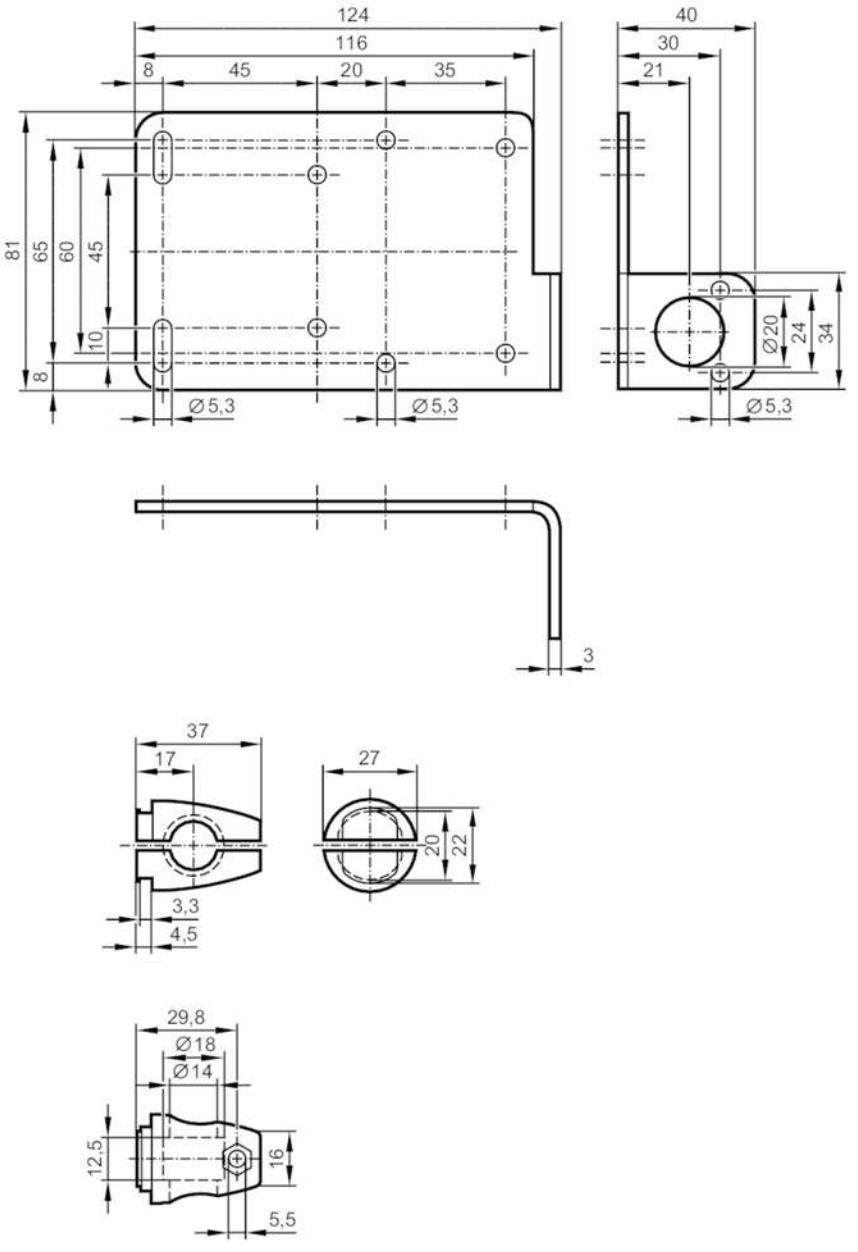

Application		
Design		clamp mounting, angled
Mechanical data		
Weight	[g]	311.5
Type of mounting		Mounting rod; (Ø 14 mm)
Materials		Clamp: stainless steel (1.4408); fixture: stainless steel (1.4571/316Ti)
Remarks		
Pack quantity		1 pcs.