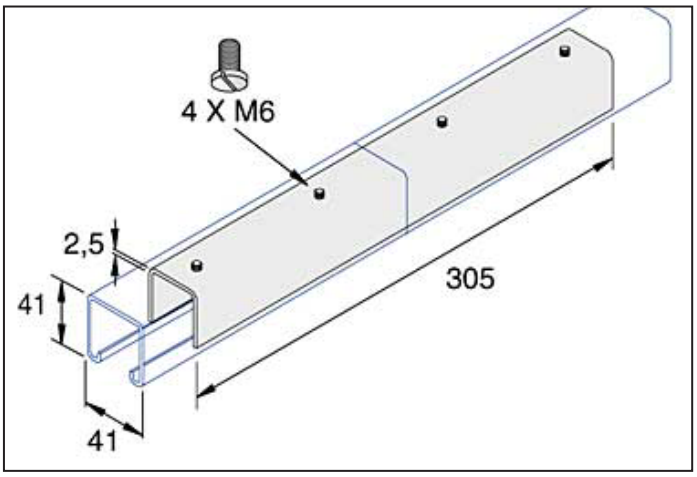

Part No.	Finish	Size	Weight	Box Qty
P1218	PG	41mm	0.54	10
P1218	SS	41mm	0.60	10

Project: A

Architect / Engineer: B

Date: C **Phone:** D

Contractor: E

Address: F

Notes 1: G

Approval Stamp: