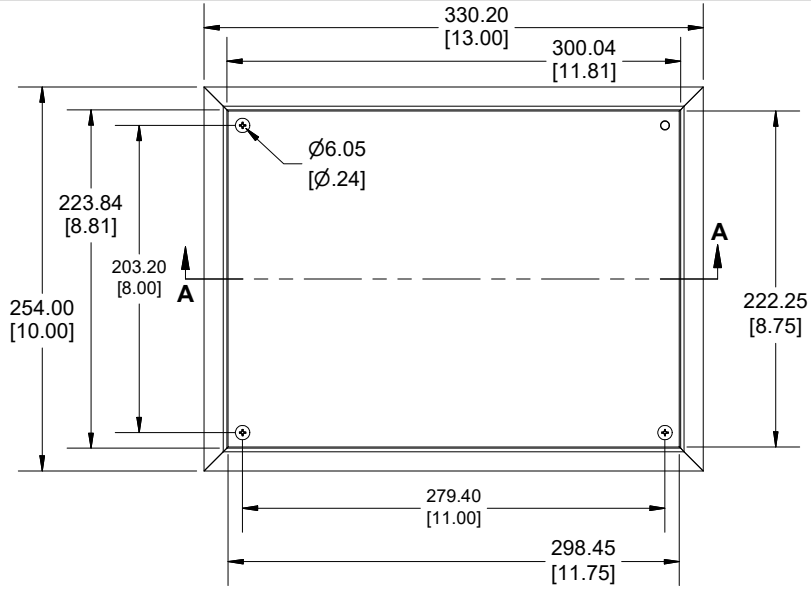

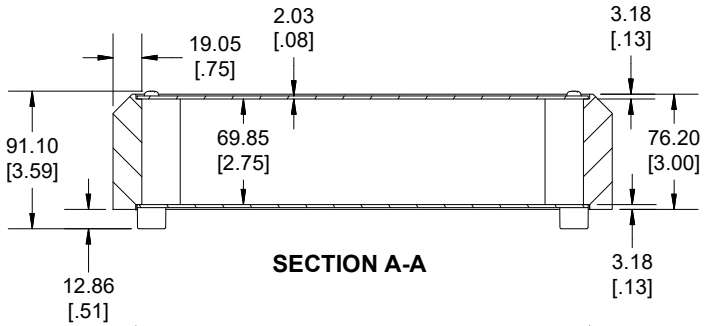

SECTION A-A

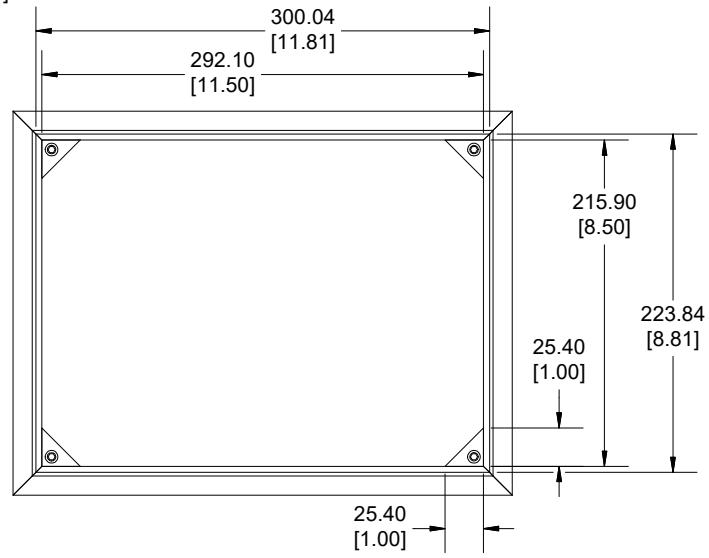

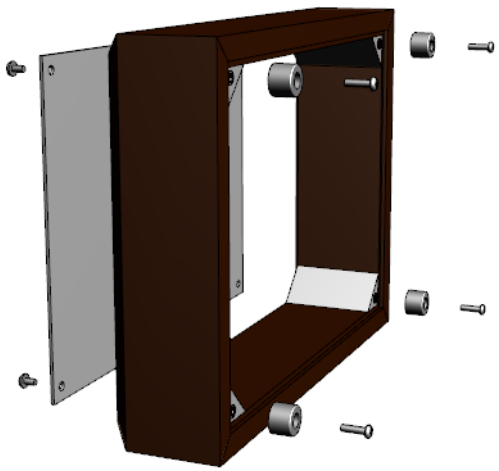

Enclosures can be Factory Modified (Milling, Drilling, Printing etc.)
Contact Factory (modshop@hammfg.com) for quotes
Solid models of this enclosure available in .stp or .x_t
(Part number and text placement/orientation on our products are subject to change, we do not recommend using them as a locating reference for modification purposes)

NOTE
Chassis Includes Solid Walnut Frame, one (1) Aluminum Panel, Rubber Feet and Required Hardware Aluminum Panels are Made of 0.040" Aluminum.
Screws should not be torqued past 4.43 lbf.in (50 cN.m)

PART NUMBERS	
13"x10" Enclosure	
Chassis with Natural Finish Panel	HWCHAS1310AL
Chassis with Satin Black Panel	HWCHAS1310BK
ACCESSORIES	
Natural Finish Panel	HW1310ALPL
Satin Black Panel	HW1310BKPL
Plated Cover Screws (Pkg 25) [8-32 x 3/8" Self-Tapping Screws]	SC1441-25
Black Cover Screws (Pkg 25) [8-32 x 3/8" Self-Tapping Screws]	SC1441BK-25

Dimensions:
mm
[inches]

HAMMOND MANUFACTURING®

HWCHAS1310

www.hammondmfg.com

REV: 08.02.2023