Inductive sensor
NI10U-M12-AP6X

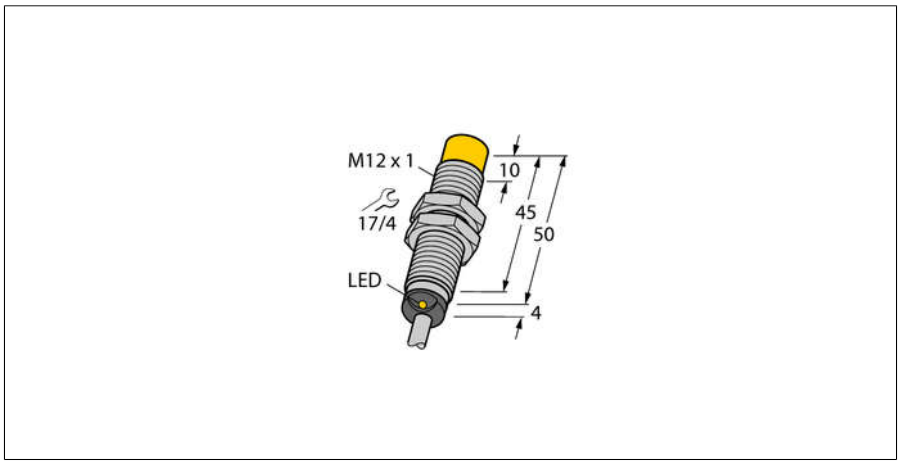

- **Threaded barrel, M12 x 1**
- **Chrome-plated brass**
- **Factor 1 for all metals**
- **Protection class IP68**
- **Resistant to magnetic fields**
- **Large switching distance**
- **Integrated protection against pre-attenuation**
- **Little metal-free spaces**
- **DC 3-wire, 10…30 VDC**
- **NO contact, PNP output**
- **Cable connection**

Type code	NI10U-M12-AP6X
Ident no.	1634805
Rated switching distance Sn	10 mm
Mounting conditions	non-flush
Assured switching distance	≤ (0,81 x Sn) mm
Repeatability	≤ 2 % of full scale
Temperature drift	≤ ± 10 %
	≤ ± 15 %, ≤ -25 °C v ≥ +70 °C
Hysteresis	3…15 %
Ambient temperature	-30…+85 °C
Operating voltage	10… 30VDC
Residual ripple	≤ 10 % U_{ss}
DC rated operational current	≤ 200 mA
No-load current I_0	≤ 20 mA
Residual current	≤ 0.1 mA
Rated insulation voltage	≤ 0.5 kV
Short-circuit protection	yes/ cyclic
Voltage drop at I_e	≤ 1.8 V
Wire breakage / Reverse polarity protection	yes/ complete
Output function	3-wire, NO contact, PNP
Protective insulation	⧈
Switching frequency	2 kHz
Construction	threaded barrel, M12 x 1
Dimensions	54 mm
Housing material	Metal, CuZn, chrome-plated
Active area material	Plastic, LCP
End cap	Plastic, EPTR
Max. tightening torque housing nut	10 Nm
Connection	cable
Cable quality	5.2 mm, LifYY, PVC, 2m
Cable cross section	3 x 0.34 mm²
Vibration resistance	55 Hz (1 mm)
Shock resistance	30 g (11 ms)
Protection class	IP68
MTTF	874 years acc. to SN 29500 (Ed. 99) 40 °C
Switching state	LED yellow

Wiring Diagram

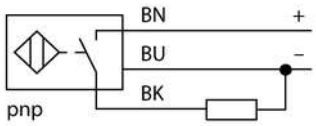

Functional principle

Inductive sensors detect metal objects contactless and wear-free. Due to the patented multi-coil system, *uprox*®+ sensors have distinct advantages over conventional sensors. They excel in largest switching distances, maximum flexibility and operational reliability as well as efficient standardization.

Edition • 2016-02-12T11:42:21+01:00

Distance D	48 mm
Distance W	3 x Sn
Distance T	45 mm
Distance S	1.5 x B
Distance G	6 x Sn
Distance N	2 x Sn

Diameter of the active area B	Ø 12 mm

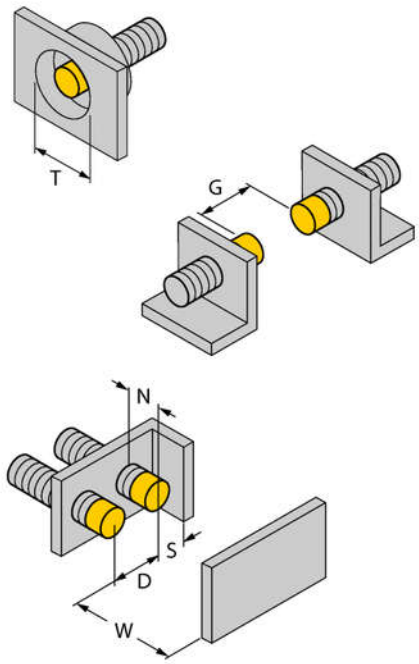

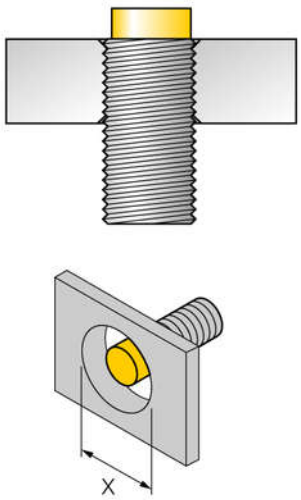

All recessed mountable *uprox*®+ threaded barrel sensors can be embedded to the upper edge of the thread. Thus safe operation is guaranteed with a reduced switching distance of max. 20 %.

When installed in an aperture plate a distance of X = 50 mm must be observed.

Accessories

Type code	Ident no.	Description	Design
QM-12	6945101	Quick-mount bracket with dead-stop; material: Chrome-plated brass Male thread M16 x 1. Note: The switching distance of proximity switches can be reduced by the use of quick-mount brackets.	
BST-12B	6947212	Fixing clamp for threaded barrel devices, with dead-stop; material: PA6	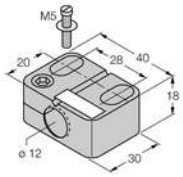
MW-12	6945003	Mounting bracket for threaded barrel devices; material: Stainless steel A2 1.4301 (AISI 304)	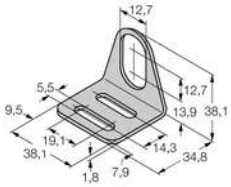
BSS-12	6901321	Mounting bracket for smooth and threaded barrel devices; material: Polypropylene	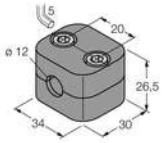

Edition • 2016-02-12T11:42:21+01:00