NOVA SENSOR

NPC-1210 Series

Medium/Low Pressure Sensors

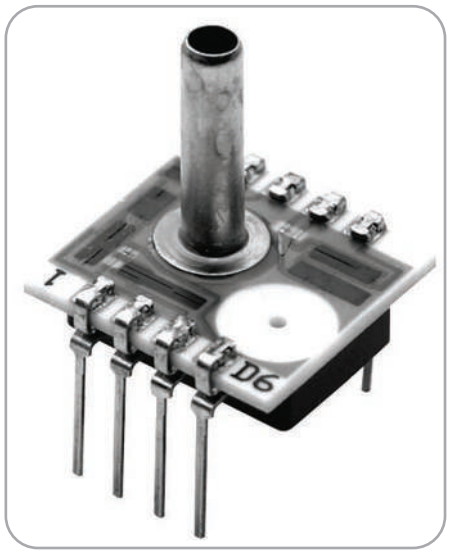

Features

- High sensitivity
- High accuracy
- Interchangeable
- Temperature Compensated: 0°C to 60°C (32°F to 140°F)
- PCB-mountable package
- Dual In-line Package (DIP)
- Solid-state reliability
- Individual device traceability

Applications

- Industrial Automation
- Air Flow Monitors
- Process Control
- Medical Equipment
- Underground Cable Leak Detection
- Ventilation
- Respirator Monitoring

Amphenol

Advanced Sensors

NPC-1210 Series Specifications

Description

The NPC-1210 series of solid-state pressure sensors is designed to provide a cost-effective solution for applications that require calibrated performance over a wide temperature range. Packaged in a dual-inline configuration, the NPC-1210 Series is intended for printed circuit board mounting. Optional pressure port and lead configurations provide superior flexibility in low profile applications where pressure connection orientation is critical.

The NPC-1210 Series is based on NovaSensor's advanced SenStable® piezoresistive sensing technology. Silicon micromachining techniques are used to ion implant piezoresistive strain gages into a Wheatstone bridge configuration. The NPC-1210 Series offers the added advantage of superior temperature performance over the temperature compensated range of 0°C to 60°C (32°F to 140°F). A gain set resistor is included to normalize the FSO for field interchangeability.

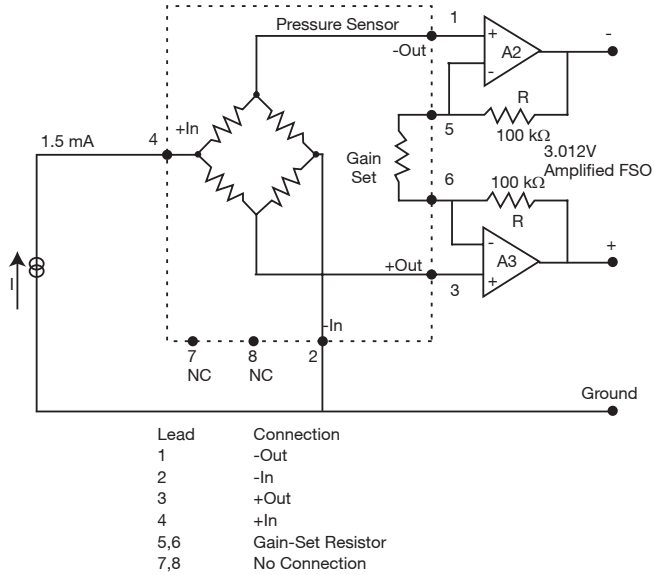

Lead	Connection
1	-Out
2	-In
3	+Out
4	+In
5,6	Gain-Set Resistor
7,8	No Connection

NPC-1210 Series Schematic Diagram

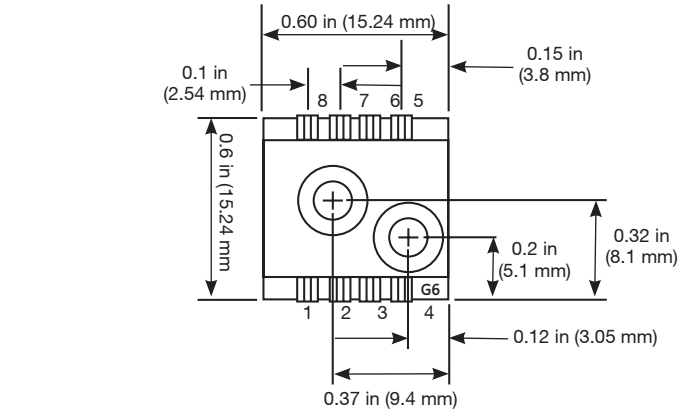

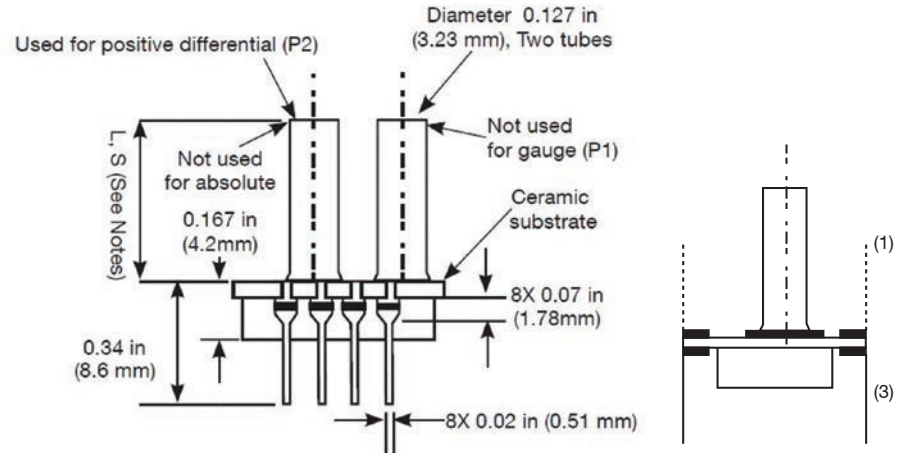

NPC-1210 Series package diagram

1. *All dimensions are for reference only.*
2. *Tube length: L = 0.49 in (12 mm), S = 0.33 in (8.3 mm), N = No tube*
3. *Lead pins can be either in the same or the opposite direction of the pressure tube. Option (1) has the leads in the "Up" position, the same direction as the tube. Option (3) has the leads in the "Down" position, the opposite direction from the tube.*
4. *Gauge and differential pressure devices are calibrated by applying pressure to the positive differential port (P2) and venting to atmosphere the reference port (P1). Absolute pressure devices use only P1 to apply vacuum or pressure.*

NPC-1210 Series Specifications

Medium Pressure Sensors

Pressure Ranges

- Gauge and Differential:
  - 5 psi (34 kPa, 0.34 bar)
  - 15 psi (100 kPa, 1.0 bar)
  - 30 psi (210 kPa, 2.1 bar)
  - 50 psi (340 kPa, 3.4 bar)
  - 100 psi (690 kPa, 6.9 bar)
- Absolute:
  - 15 psi (100 kPa, 1.0 bar)
  - 30 psi (210 kPa, 2.1 bar)
  - 50 psi (340 kPa, 3.4 bar)
  - 100 psi (690 kPa, 6.9 bar)
- For other pressure ranges, please contact NovaSensor.

Parameter	Value	Units	Notes
Environmental			
Temperature Range			
Operating	–40 to 125	°C	(-40° to 257°F)
Compensated	0 to 60	°C	(32°F to 140°F)
Storage	–55 to 150	°C	(–67 to 302 °F)
Mechanical			
Weight	2.5	g	(0.005 lb)
Media Compatibility	Compatible with exposed materials		7
Positive differential and gauge ports	*Dry gases only*		
Absolute and negative differential ports	*Dry gases only*		

Parameter	Units	Minimum	Typical	Maximum	Notes
Performance Parameters *					
FS Output (FSO)	mV	75	100	150	2, 3
Zero Pressure Output	mV	-2	—	2	3
Linearity	%FSO	-0.1	—	0.1	4, 8
Pressure Hysteresis	%FSO	-0.1	—	0.1	
Input Impedance	Ω	2500	4000	6000	
Output Impedance	Ω	4000	5000	6000	
Thermal Accuracy–Span	%FSO	-0.5	—	0.5	3, 5, 8
Thermal Accuracy–Zero	%FSO	-0.5	—	0.5	3, 5, 8
Temperature Coefficient–Resistance	%/°C	—	0.2	—	5
Thermal Hysteresis–Zero	%FSO	—	0.1	—	5
Input Excitation	mA	—	1.5	2.0	
Pressure Overload	Rated	—	—	3X	6, 9

Low Pressure Sensors

Pressure Ranges

- Gauge and Differential:
  - 10 in H_20 (2.5 kPa, 0.025 bar)
  - 1 psi (6.9 kPa, 0.069 bar)

Parameter	Value	Units	Notes
Environmental			
Temperature Range			
Operating	–40 to 125	°C	(-40° to 257°F)
Compensated	0 to 60	°C	(32°F to 140°F)
Storage	–55 to 150	°C	(–67 to 302 °F)
Mechanical			
Weight	2.5	g	(0.005 lb)
Media Compatibility	Compatible with exposed materials		7
Positive differential and gauge ports	*Dry gases only*		
Absolute and negative differential ports	*Dry gases only*		

Parameter	Units	Minimum	Typical	Maximum	Notes
Performance Parameters *					
FSO 10 inH_2O	mV	25	50	70	2, 3
FSO 1 psi	mV	50	75	110	2, 3
Zero Pressure Output	mV	-2	—	2	3
Linearity	%FSO	-0.5	—	0.5	4
Pressure Hysteresis	%FSO	-0.1	—	0.1	
Input Impedance	Ω	2500	4000	6000	
Output Impedance	Ω	4000	5000	6000	
Thermal Accuracy–Span	%FSO	-1.0	—	1.0	3, 5
Thermal Accuracy–Zero	%FSO	-1.25	—	1.25	3, 5
Temperature Coefficient–Resistance	%/°C	—	0.22	—	5
Thermal Hysteresis–Zero	%FSO	—	0.1	—	5
Input Excitation	mA	—	1.5	2.0	
Pressure Overload	psi (bar)	5 (0.34)	—	—	—

1. **Supply current = 1.5 mA and ambient temperature = 77°F (25°C), unless otherwise noted. Gauge and differential pressure devices are calibrated by applying pressure to the positive differential port (P2) and venting to atmosphere the reference port (P1).*
2. *Output span of unamplified sensor.*
3. *Compensation resistors are an integral part of the sensor package; no additional external resistors are required. Pins 7 and 8 must be kept open. The NPC-1210 is interchangeable only when used with the gain set resistor shown in the schematic diagram. Maximum gain-set resistor mismatch is 2%.*
4. *Best fit straight line.*
5. *Temperature range 32°F to 140°F (0°C to 60°C), reference to 77°F (25°C).*
6. *3X or 200 psi (13.78 bar) maximum, whichever is less.*
7. *Exposed materials are pyrex, ceramic, silicon, epoxy, RTV, and stainless steel.*
8. *5 psi (0.34 bar) spec.: Linearity: 0.25 ±%FSO, TC-span: 0.75 ±%FSO, TC-zero: 0.75 ±%FSO. otherwise noted.*
9. *Port 1 is limited to 60 PSIG for differential and absolute pressure sensors. Contact factory for 50 PSIA/D and 100 PSIA/D units.*

NPC-1210 Series Specifications

Ordering Information

The code number to be ordered may be specified as follows:
NPC-1210 (Medium Pressure)

Code	Pressure Range
005	5 psi (0.3 bar)
015	15 psi (1 bar)
030	30 psi (2 bar)
050	50 psi (3.4 bar)
100	100 psi (7 bar)

Code	Type
D	Differential
A	Absolute
G	Gauge

Code	Lead Configurations
1	Up
3	Down

Code	Tube Options
L	Long
S	Short
N	None *

NPC-1210 -___ - ___ - ___ - ___ Typical model number

* Order NPC-1210-XXXG-XN in place of NPC-1210-XXXD-XN

The code number to be ordered may be specified as follows:
NPC-1210 (Low Pressure)

Code	Pressure Range
10W	10 in H_2O (25 mbar)
001	1 psi (69 mbar)

Code	Type
D	Differential
G	Gauge

Code	Lead Configurations
1	Up
3	Down

Code	Tube Options
L	Long
S	Short

NPC-1210 -___ - ___ - ___ - ___ Typical model number

Warranty

Amphenol Advanced Sensors warrants its products against defects in material and workmanship for 12 months from the date of shipment. Products not subjected to misuse will be repaired or replaced. Amphenol Advanced Sensors reserves the right to make changes without further notice to any products herein. NovaSensor makes no warranty, representation or guarantee regarding the suitability of its products for any particular application, nor does Amphenol Advanced Sensors assume any liability arising out of the application or use of any product or circuit and specifically disclaims and all liability without limitation consequential or incidental damages. The foregoing warranties are exclusive and in lieu of all other warranties, whether written, oral, implied or statutory. No implied statutory warranty of merchantability or fitness for particular purpose shall apply.

Amphenol
Advanced Sensors

www.amphenol-sensors.com

© 2021 Amphenol Corporation. All Rights Reserved. Specifications are subject to change without notice.
Other company names and product names used in this document are the registered trademarks or trademarks of their respective owners.