1597DINCOV1

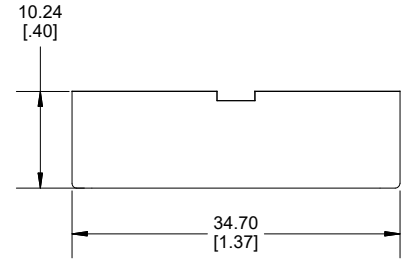

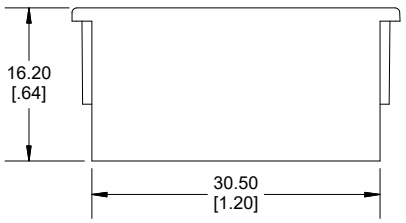

1597DINCOV2

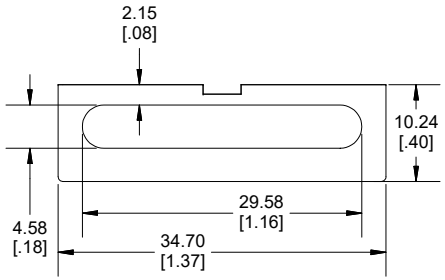

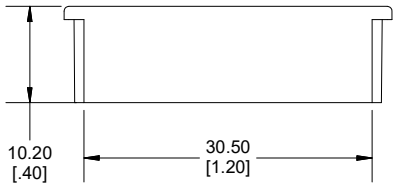

1597DINCOV3



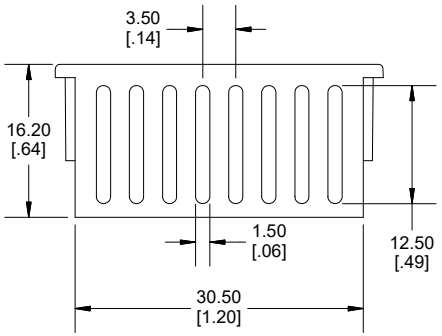

1597DINCOV4

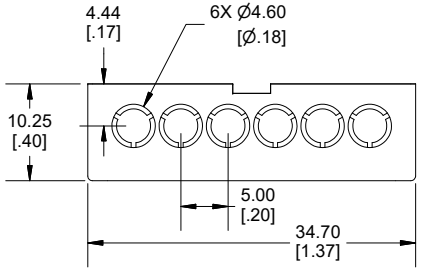

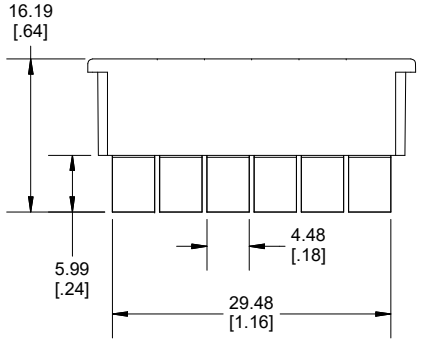

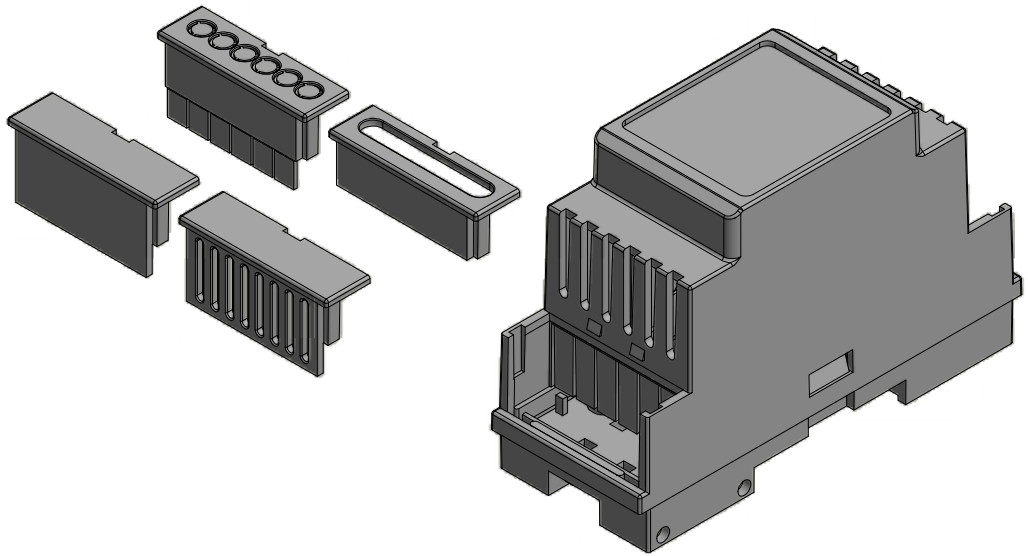

Dimensions:
mm
[inches]

HAMMOND MANUFACTURING®

1597DIN ACCS

www.hammondmfg.com

REV:28.04.2020