Brand of NTN corporation

Technical data

UKFC216H

Bearing units



Grey cast housing, radial insert ball bearing with adapter sleeve,seal with slinger

KIT CONTENT

UK216G2H, FC216

VISUAL (S)

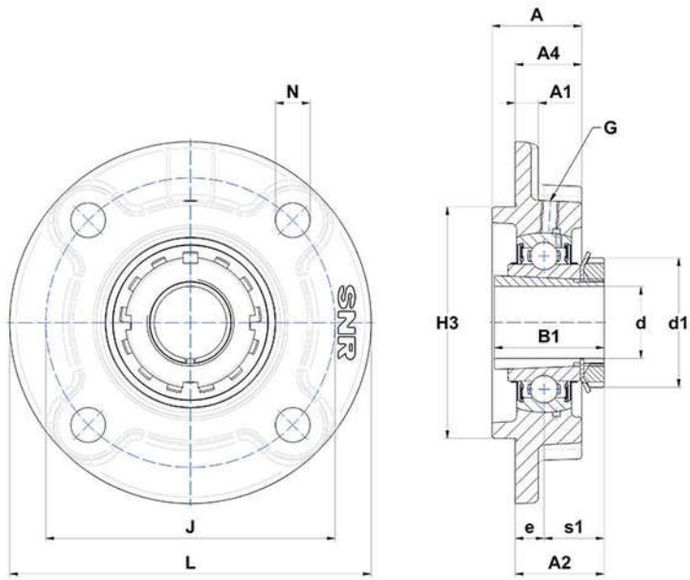

PRODUCT DEFINITION

Brand	SNR
A - Housing height	58 mm
A1 - Housing foot height / flange height	18 mm
A2 - Total height from mounting surface	57 mm
A4 - Housing height from mounting surface	42 mm
B - Width of Inner Ring	44 mm

UKFC216H
Bearing units

PRODUCT DEFINITION	
B1 - Overall width Inner Ring	78 mm
d - Shaft diameter	70 mm
d1 - Outer dia of eccent. Lock. collar / nut of adapter sleeve	105 mm
e - Distance mounting surface to bearing center	18 mm
G - Grease fitting	M10x1
H3 - Centering dia	170 mm
J - Mounting holes distance	200 mm
L - Housing width / diameter	240 mm
N - Mounting hole dimension	23 mm
s1 - Distance nut to middle of bearing raceway	39 mm

PRODUCT PERFORMANCE	
C - Dynamic load rating	72500000 mN
C0 - Static load rating	54200000 mN
Operating temperature min.	253,15 °K
Operating temperature max.	373,15 °K

OTHER FEATURES	
Mass	9,36 kg
Adapter sleeve designation	H2316