TI00380F/00/EN/15.20
71467654
2020-02-28

Technical Information
Nivotester FTC325

Capacitance

Point level switch with intrinsically safe signal circuit for connection to capacitance sensors





Application

- Point level detection in liquid tanks and bulk solids silos, also in hazardous areas
- For sensors in Zone 0 or Zone 20
- Liquid detection in pipes for dry-running protection of pumps
- Overfill prevention in tanks with flammable or non-flammable water-polluting liquids
- Two-point control (Δs with 3-WIRE) and point level detection with a switching unit
- International explosion protection certificates, overfill prevention, WHG

Your benefits

- Intrinsically safe signal circuit [Ex ia] for use of sensors in hazardous areas
- Compact housing for simple side-by-side installation on standard DIN rails in cabinet
- Calibration at the touch of a button
- High degree of functional safety thanks to fail-safe PFM or 3-WIRE technology of the verifiable relay function
- Easy wiring thanks to plug-in terminal blocks
- Limit value and fault-signaling relay

Endress+Hauser
People for Process Automation

Table of contents

About this document 3
Symbols 3

Function and system design 3
Function 3
Signal transmission 3
Signal evaluation 4
Fail-safe mode 4
Function monitoring 5
Calibration button (red) 5
Test button/correction button (green) only for FTC325 PFM 5
Additional switch functions 5
Measuring system 6

Input 8
Measured variable 8
Measuring range 8
Input signal 8

Output 9
Output signal 9
Overvoltage category according to EN 61010 9
Protection class 9
Signal on alarm 9
Galvanic isolation 9

Power supply 9
Electrical connection 9
Supply voltage 10
Power consumption 10

Performance characteristics 10
Switch-on behavior 10

Installation 10
Mounting location 10
Orientation 10

Environment 12
Ambient temperature range 12
Climate and mechanical application class 12
Operating altitude 12
Humidity 12
Pollution degree 12
Degree of protection 12
Shock resistance 12
Vibration resistance 12
Electromagnetic compatibility (EMC) 12

Mechanical construction 12
Design, dimensions 12
Weight 13
Materials 13
Terminals 13

Operability 15
Operating concept 15
Display elements 15
Operating elements 15

Ordering information 16

Certificates and approvals 16
CE mark 16
RCM-Tick mark 16
Ex approval 16
Type of protection 16
Overfill prevention 16
Other standards and guidelines 16

Accessories 16
Protective housing 16

Supplementary documentation 17
Operating Instructions 17
Technical Information 17
Certificate 17

About this document

Symbols

Safety symbols

DANGER

This symbol alerts you to a dangerous situation. Failure to avoid this situation will result in serious or fatal injury.

WARNING

This symbol alerts you to a dangerous situation. Failure to avoid this situation can result in serious or fatal injury.

CAUTION

This symbol alerts you to a dangerous situation. Failure to avoid this situation can result in minor or medium injury.

NOTICE

This symbol contains information on procedures and other facts which do not result in personal injury.

Electrical symbols

Double or reinforced insulation
Protection between mains circuit and output voltage

Symbols for certain types of information

Tip
Indicates additional information

Reference to documentation

Symbols for graphics

A, B, C ... View

1, 2, 3 ... Item numbers

Function and system design

Function

The probe and vessel (or ground tube/counterpotential) form a capacitor whose capacitance is influenced by the level.

PFM (pulse-frequency modulation)

The FEI57 electronic insert converts the change in capacitance to a change in frequency, which switches the output relay in the Nivotester FTC325 PFM.

3-WIRE

The FEI53 electronic insert converts the change in capacitance to a voltage signal, which switches the output relay in the Nivotester FTC325 3-WIRE.

Signal transmission

The signal input of the Nivotester is galvanically isolated from the mains and the output.

PFM

The Nivotester supplies intrinsically safe direct current to the capacitance sensor via a two-wire cable. From the sensor, it receives a frequency which signals whether or not the point level has been reached. The sensor superimposes current pulses (PFM signals) with a pulse width of approx. 200 µs and a current strength of approx. 10 mA on the supply current. The measuring capacitance is in the range from 5 to 500 pF or 5 to 1600 pF. This corresponds to a transmission frequency of 185 to 60 Hz.

3-WIRE

The Nivotester supplies direct current to the capacitance sensor via a two-wire cable. Via a third wire, the Nivotester receives a voltage signal, which signals whether or not the point level has been reached. The measuring capacitance is in the range from 10 to 350 pF. This corresponds to a voltage of 3 to 12 V.

Signal evaluation

The Nivotester evaluates the frequency or the voltage signal, and switches the output relay for the level alarm. The switching state of the relay (energized or de-energized) is indicated by two yellow light emitting diodes on the front panel of the Nivotester.

Fail-safe mode

The choice of fail-safe mode ensures that the relay always works with quiescent current safety.

- MAX = maximum safety: the relay de-energizes when the level exceeds the switch point (probe is covered), a fault occurs or the power supply fails. Used for overfill prevention, for instance.
- MIN = minimum safety: the relay de-energizes when the level falls below the switch point (probe is free), a fault occurs or the power supply fails. Used for dry running protection or pump protection, for instance.

PFM

Point level detection depending on the level and fail-safe mode

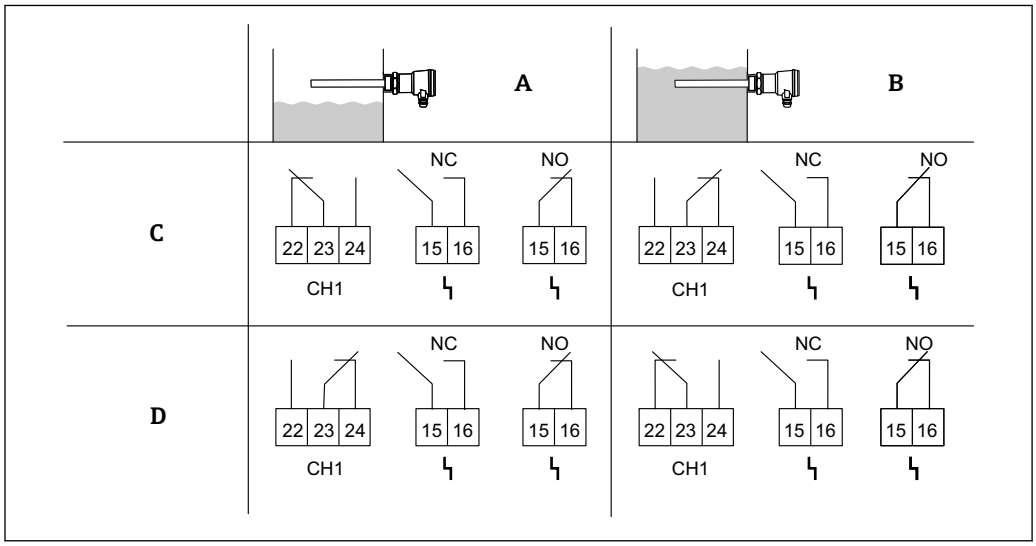

A Level indication: probe is free
B Level indication: probe is covered
C MAX fail-safe mode
D MIN fail-safe mode

3-WIRE

Point level detection depending on the level and fail-safe mode

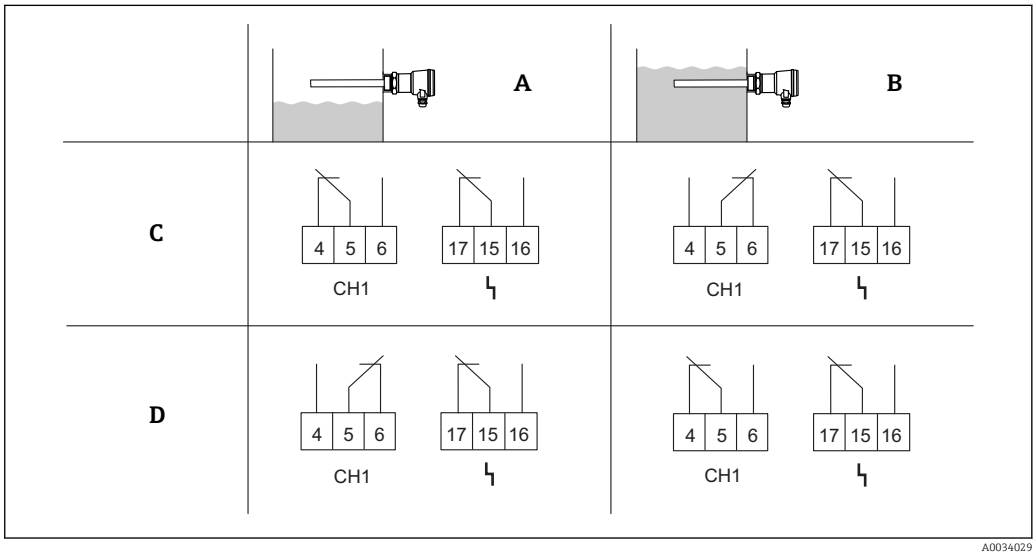

A Level indication: probe is free
B Level indication: probe is covered
C MAX fail-safe mode
D MIN fail-safe mode

Function monitoring

To increase operational safety, the Nivotester is equipped with a function monitoring system. A fault causes the relay for the level alarm and the alarm relay to de-energize and is indicated by the red light emitting diode (LED).

A fault is reported if the Nivotester no longer receives a measuring signal. This can occur, for example, if:

- A short circuit occurs
- The signal line to the sensor is interrupted
- The sensor electronics are defective
- The input circuit of the Nivotester is defective

After calibration, every additional change to the device configuration causes the relay to de-energize. A fault message is indicated by the red LED.

Calibration button (red)

Calibration is carried out automatically by pressing the calibration button. Settings do not need to be made via the rotary switch.

Test button/correction button (green) only for FTC325 PFM

- Function checking of the output relay and fault-signaling relay
- Confirms a change in the operating mode, e.g. if the switching delay changes after initial calibration. This corrects the operating mode without the need to perform a recalibration. The modified settings are saved by pressing the button.

Additional switch functions

- Adjustable switching delay 0 to 45 s: allows the delayed switching of the relay when the probe is covered or uncovered. In the opposite direction, each switching delay is 0.2 s.
- Two-point control (Δs, 3-WIRE)) → 🖹 6
- Potentiometer (rotary switch) for shifting the switch point: enables the safe operation of the system, even with media that are prone to form buildup.

Measuring system

A simple measuring system consists of a capacitance sensor, a Nivotester FTC325 and a control or signal unit. The following electronic inserts (FEIx) can be used in conjunction with the sensors listed:

FEI57S with FTC325 PFM	FEI53 with FTC325 3-WIRE
Liquicap M FTI51, FTI52	
Solicap M FTI55, FTI56	
Solicap S FTI77	

Probe design

Examples of media	εr	Conductivity	Build-up	Probe design			
				Full insulation	Partial insulation	With ground tube	Without ground tube
Solvents fuels	< 3	low	low	✔	✔	✔	–
Dry bulk solids	< 3	low	low	–	✔	–	✔
Moist bulk solids	> 3	average	average	✔	✔	–	✔
Aqueous liquids and alcohols	> 3	high	low	✔	✔	–	✔
			strong	–	✔	–	✔
Sludge	> 3	high	very strong	–	✔	–	✔

Nivotester FTC325 PFM

The measuring system consists of the following components:

- Sensor
  - Capacitance probe
  - Electronic insert FEI57S
- Nivotester FTC325 PFM
- Control or signal units

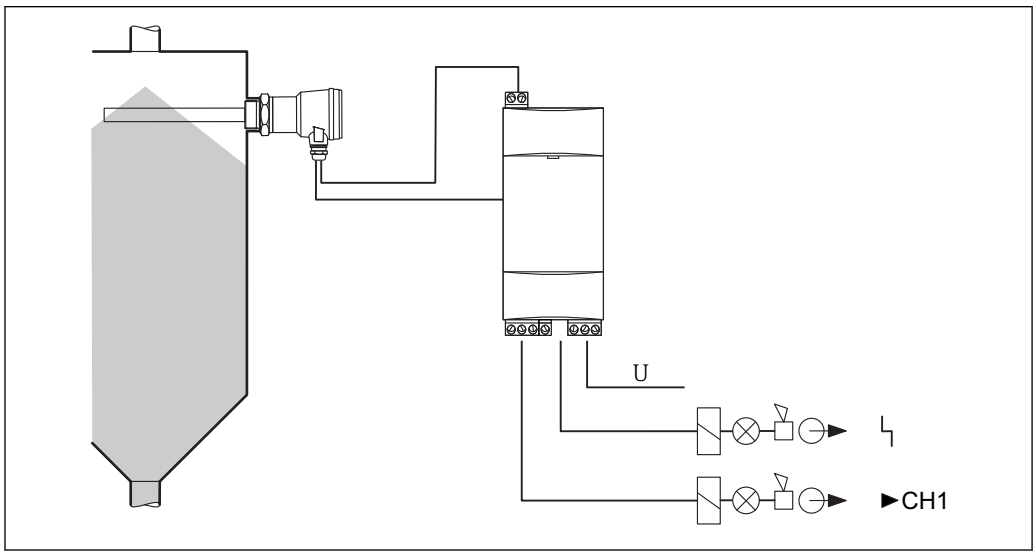

1 Partially or fully insulated probe

Nivotester FTC325 3-WIRE

The measuring systems consist of the following components:

- Sensor
  - 1 to 2 capacitance probes
  - Electronic insert FEI53
- Nivotester FTC325 3-WIRE
- Control or signal units

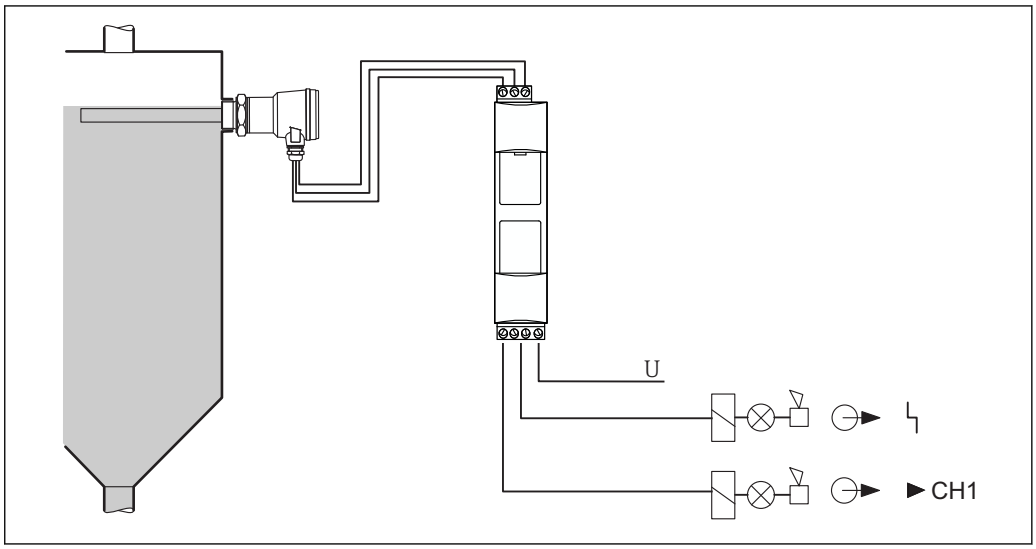

2 *Partially or fully insulated probe*

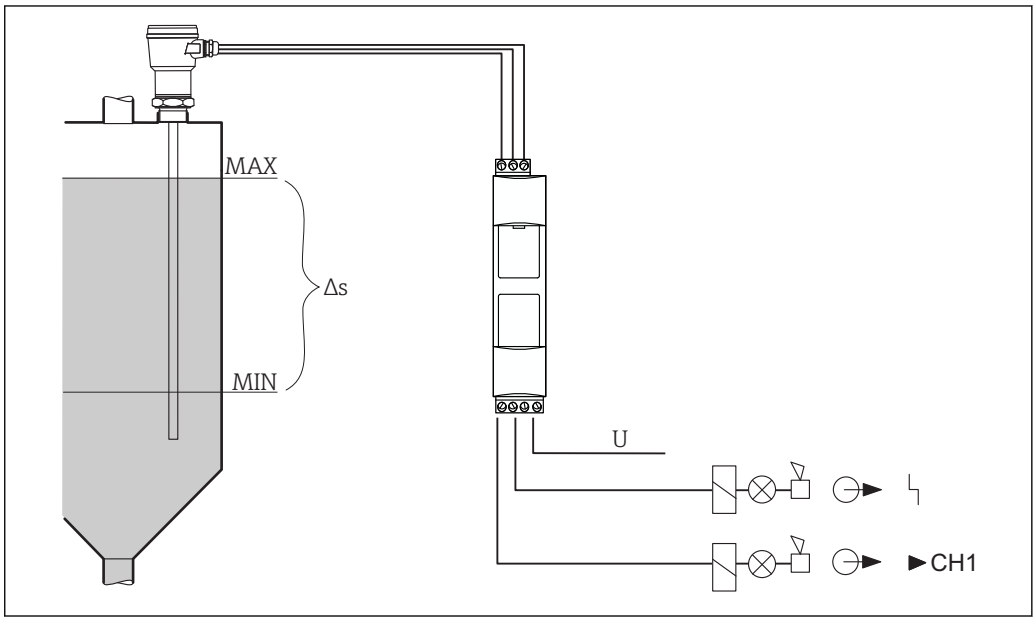

3 *Two-point control with fully insulated probe*

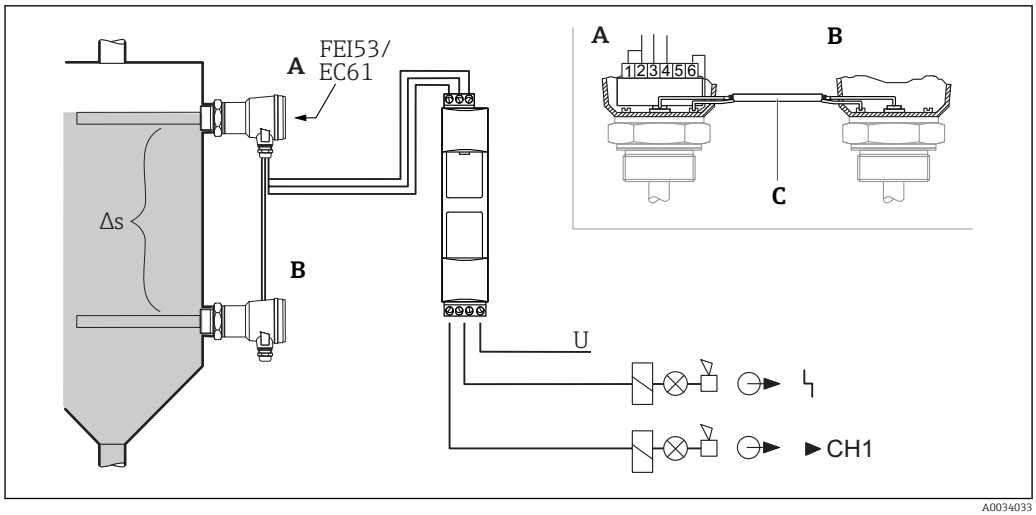

4 *Two-point control with two fully insulated or partially insulated probes (A, B) and an electronic insert FEI53. The probes are connected by a coaxial cable (C).*

Input

Measured variable

The point level signal is triggered at MIN level or MAX level, depending on the setting.

Measuring range

The measuring range depends on the installation location of the sensors.

Input signal

FTC325 PFM
- Galvanically isolated from power supply and output
- Type of protection: intrinsic safety [Ex ia] IIC
- Connectable sensors and electronic insert FEI57S:
  - Liquicap M FTI51, FTI52
  - Solicap M FTI55, FTI56
  - Solicap S FTI77
- Sensors powered by Nivotester FTC325 PFM
- Connection cable: two-wire
  Shielding not required, except in the event of strong electromagnetic interference (see also "Electromagnetic compatibility" (→ 12
- Cable length/cable resistance: 1000 m (3281 ft)/max. 25 Ω per wire
- Signal transmission: pulse-frequency modulation (PFM)

FTC325 3-WIRE
- Galvanically isolated from power supply and output
- Type of protection: version for non-hazardous area
- Connectable sensors and electronic insert FEI53:
  - Liquicap M FTI51, FTI52
  - Solicap M FTI55, FTI56
  - Solicap S FTI77
- Sensors powered by Nivotester FTC325 3-WIRE
- Connection cable: three-wire
  Shielding not required, except in the event of strong electromagnetic interference (see also "Electromagnetic compatibility" → 12)
- Cable length/cable resistance: 1000 m (3281 ft)/max. 25 Ω per wire
- Signal transmission: voltage change is transmitted via a separate wire

Please refer to the relevant certificates for additional information on the use of the sensors in the hazardous area → 17.

Output

Output signal

- Relay output: a potential-free changeover contact for the level alarm
- Quiescent current fail-safe mode: MIN/MAX safety can be selected with DIL switch
- Fault-signaling relay: potential-free changeover contact for fault signaling; only two contacts are available with the PFM version (specify NC (normally closed contact) or NO (normally open contact) when ordering a PFM device)
- Switching delay: approx. 0 to 45 s
  Depending on the setting, the relay switches when the probe is covered or uncovered
- Relay contact switching capacity:
  Alternating voltage (AC)
  U ~ maximum 250 V
  I ~ maximum 2 A
  P ~ maximum 500 VA at cos φ ≥ 0.7
  Direct current (DC)
  U = maximum 40 V
  I = maximum 2 A
  P = maximum 80 W
- Operating life: at least 10^5 switching operations with maximum contact load
- Function indicators: LEDs for operation, level alarm and fault
  Is lit as long as the probe is covered.

Overvoltage category according to EN 61010

II

Protection class

II (double or reinforced insulation)

Signal on alarm

Level relay per channel dropped out; fault signaled by red LEDs, fault-signaling relay dropped out

Galvanic isolation

All input and output channels and relay contacts are galvanically isolated from each other. If the power supply circuit or the fault-signaling relay contacts is/are simultaneously connected to functional extra-low voltage, safe galvanic isolation is guaranteed up to a voltage of 150 V_{AC}.

Power supply

Electrical connection

Sensor operation in the hazardous area

Observe all national explosion protection regulations concerning the type and installation of intrinsically safe signal cabling.

Please refer to the Safety Instructions for the maximum permissible values for capacitance and inductance → 🖹 17.

Connecting the sensors

The removable terminal blocks are color-coded into intrinsically safe and non-intrinsically safe terminals. This difference helps to ensure safe wiring.

Blue terminal blocks at top for hazardous area

Two-wire connection cable between the Nivotester and sensor, e.g. commercially available instrument cable or cores in a multi-core cable for measurement purposes.

Use a shielded cable in the event of strong electromagnetic interference, e.g. from machines or radio equipment. Only connect the shield to the grounding terminal in the sensor. Do not connect it to the Nivotester.

Connecting the signal and control units

Gray terminal blocks at bottom for the non-hazardous area

The relay function depends on the level and fail-safe mode. If a device with high inductance is connected (e.g. contactor or solenoid valve), a spark arrester must be provided to protect the relay contact.

Connecting the supply voltage

Green terminal block at bottom

A fuse is integrated into the power supply circuit. An additional fine-wire fuse is not necessary. The Nivotester is equipped with reverse polarity protection.

Supply voltage

Alternating current version

Voltage range: 85 to 253 V_{AC}, 50/60 Hz

Low voltage versions

- Voltage range: 20 to 30 V_{AC}/ 20 to 60 V_{DC}
- D/C power supply: maximum 100 mA
- Permissible residual ripple within tolerance: U_{ss} = maximum 2 V

Power consumption

AC
Maximum 6.0 VA

DC
Maximum 2.0 W (with U_{min} 20 V)

Performance characteristics

Switch-on behavior

Correct switch state after power-up: 10 to 40 s, depends on the connected sensor.

Installation

Mounting location

- The device must be housed in a cabinet or protective housing outside the hazardous area.
- Mount the devices so that they are protected against weather and impact. Avoid exposure to direct sunlight.
- A protective housing (IP66) for up to 4 Nivotester FTC325 3-WIRE or 2 FTC325 PFM devices is available for outdoor installation → 16.

Orientation

Horizontal orientation

Horizontal installation ensures better dissipation of heat and is therefore the preferred orientation.

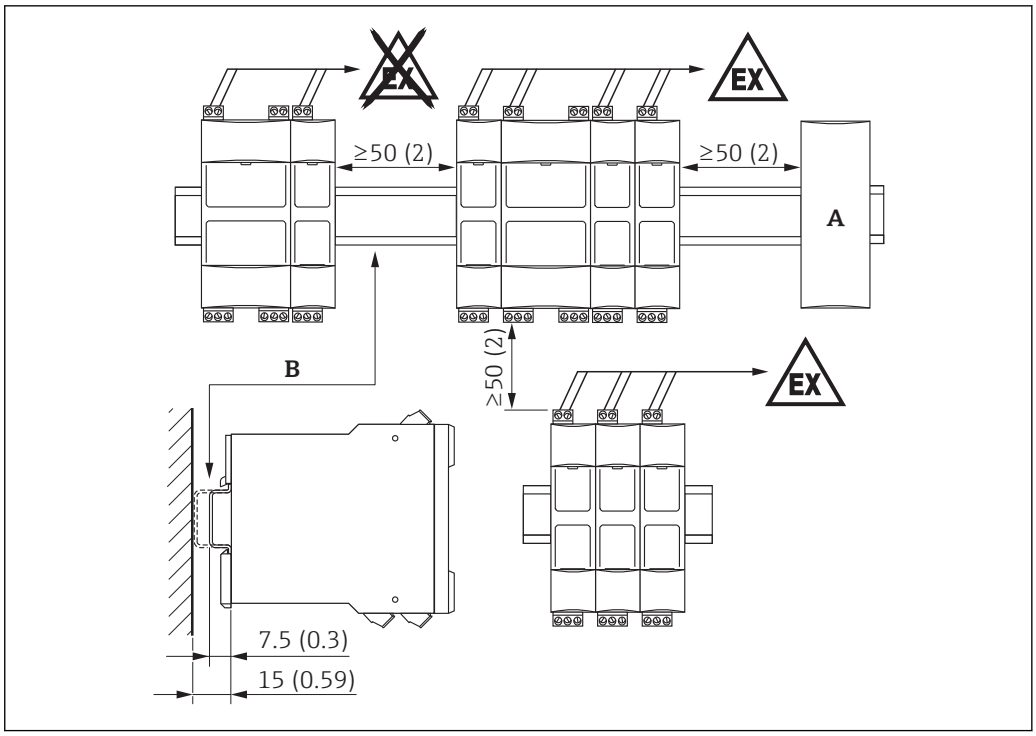

A0034034

Dimensions mm (in)
A Connection of another device type
B DIN rail in accordance with EN 60715 TH35-7.5/15

Vertical orientation

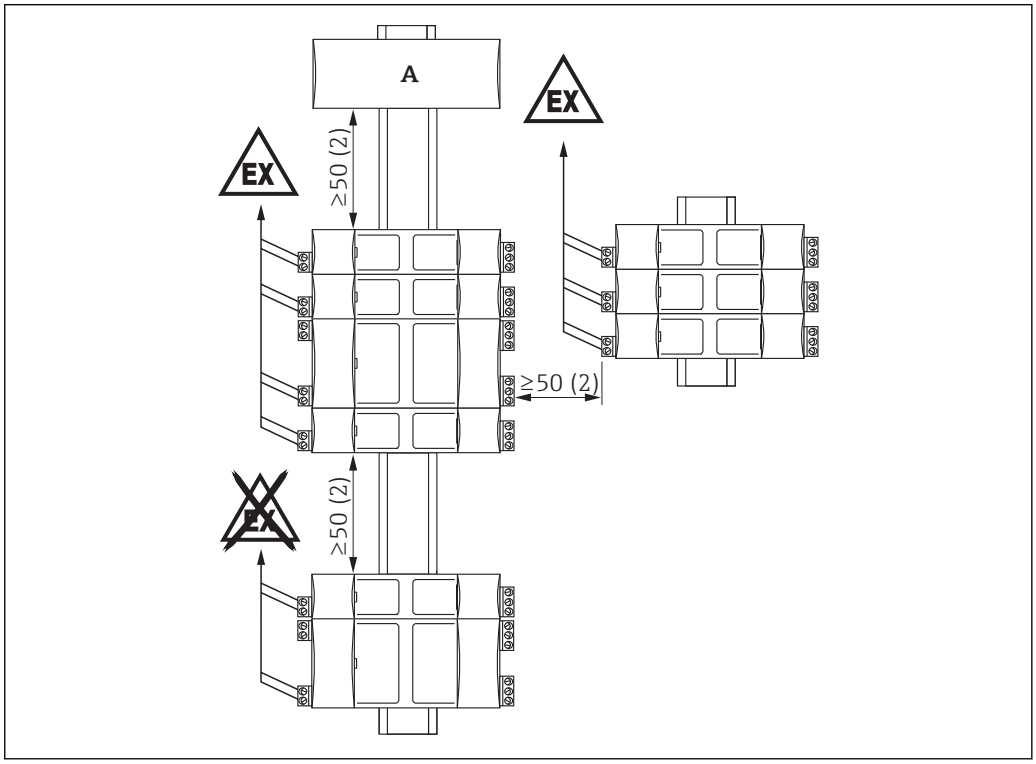

A0034035

Dimensions mm (in)
A Connection of another device type

Environment

Ambient temperature range	▪ For single installation: −20 to +60 °C (−4 to 140 °F) ▪ For side-by-side installation without lateral spacing: −20 to +50 °C (−4 to +122 °F) ▪ For installation in protective housing: −20 to +40 °C (−4 to +104 °F) A maximum of 4 FTC325 3-WIRE or 2 FTC325 PFM devices may be installed in a protective housing. ▪ Storage temperature: −25 to +85 °C (−13 to 185), preferably at 20 °C (68 °F)
Climate and mechanical application class	3K3 and 3M2 in accordance with IEC/EN 60721-3-3
Operating altitude	As per IEC 61010-1 Ed.3: Up to 2 000 m (6 500 ft) above sea level
Humidity	5 to 85 %
Pollution degree	Pollution degree 2 as per IEC 61010-1
Degree of protection	▪ IP20 (as per IEC/EN 60529) ▪ IK06 (as per IEC/EN 62262)
Shock resistance	DIN EN 60068-2-27:2008: a = 150 m/s^2 t = 11 ms, 3 axes x 2 directions x 3 shocks
Vibration resistance	DIN EN 60068-2-64:2009: a(RMS) = 28 m/s^2, f = 5 to 2000 Hz, t = 3 axes x 2 h
Electromagnetic compatibility (EMC)	▪ Interference emission according to EN 61326, Class A equipment. ▪ Interference immunity according to EN 61326; Annex A (Industrial) and NAMUR Recommendation NE21 (EMC) This device does not require maintenance work.

Mechanical construction

Design, dimensions

Dimensions

Exact dimensions are available in the Product Configurator on the Endress+Hauser website: www.endress.com → Product finder → On the product page, click the "Configure" button to the right of the product photo.

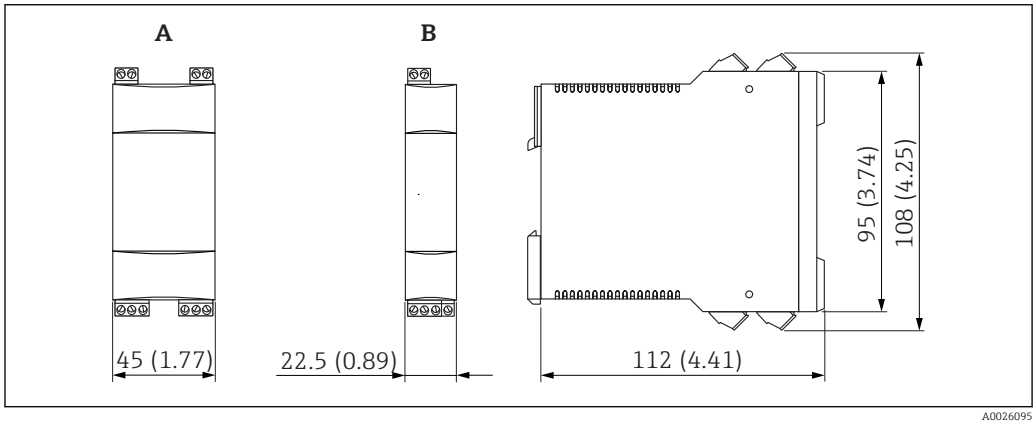

Dimensions mm (in)
A Nivotester FTC325 PFM
B Nivotester FTC325 3-WIRE

Weight

- PFM: approx. 250 g (8.81 oz)
- 3-WIRE: approx. 148 g (5.22 oz)

Materials

- Housing: polycarbonate PC
- Front cover: polypropylene PP
- Fixing slide to secure to DIN rail: polyamide PA6

Terminals

PFM

- 2 screw terminals: sensor power supply
- 3 screw terminals: level relay
- 2 screw terminals: fault-signaling relay
- 2 screw terminals: power supply

3-WIRE

- 3 screw terminals: sensor power supply + signal
- 4 screw terminals:
  - 3 limit relays
  - 1 for contact 3 of the fault-signaling relay
- 4 screw terminals:
  - 2 AC/DC power supply
  - 2 fault-signaling relays

Connection cross-section

Maximum 1 x 2.5 mm^2 (14 AWG) or 2 x 1.5 mm^2 (16 AWG)

Connecting cable

Strip the cable ends (maximum 7 mm (0.03 in))

Terminal assignment

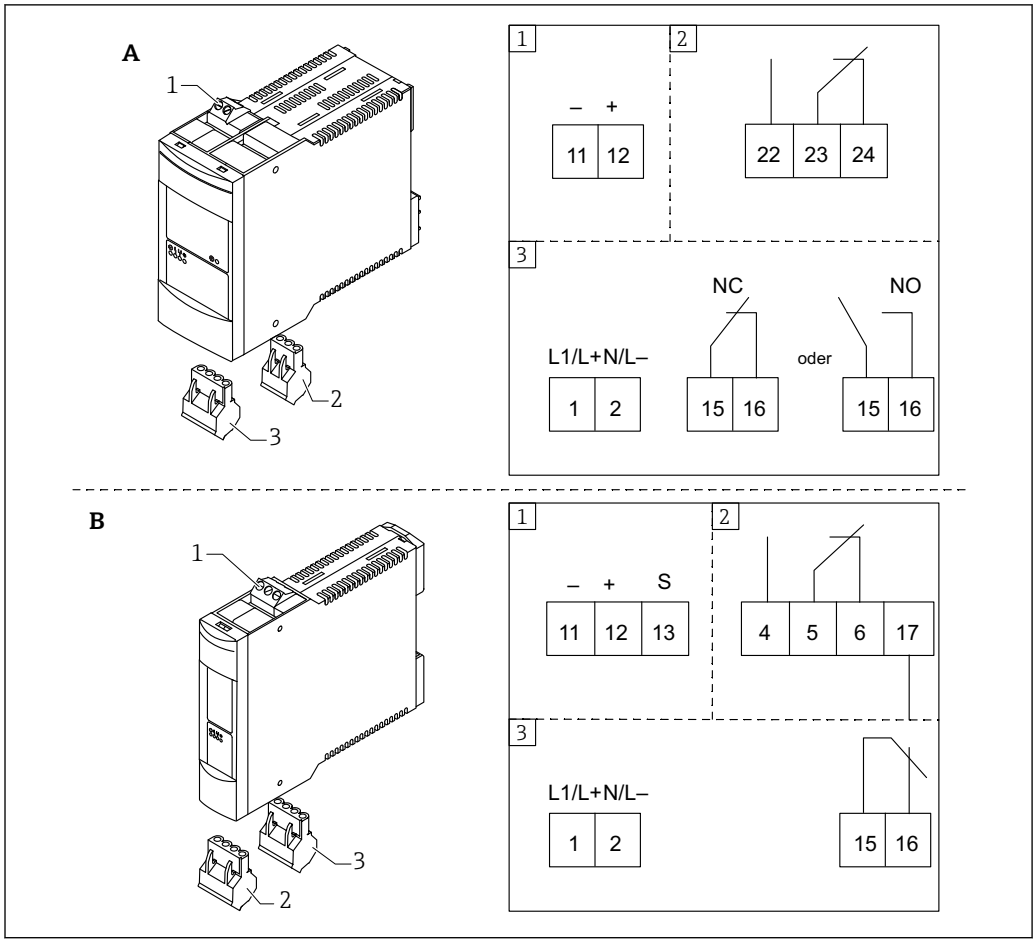

A PFM
B 3-WIRE
1 Sensor power supply
2 Level relay
3 Power supply / fault-signaling relay

Operability

Operating concept

Onsite configuration with DIL switches behind fold-down front panel

Display elements

Light emitting diodes (LEDs)
- Green LED: ready for operation
- Red LED: fault signalling
- Yellow LED (left): level relay energized
- Yellow LED (right): probe free or covered
  Level signalling independent of the selected fail-safe mode

Operating elements

PFM

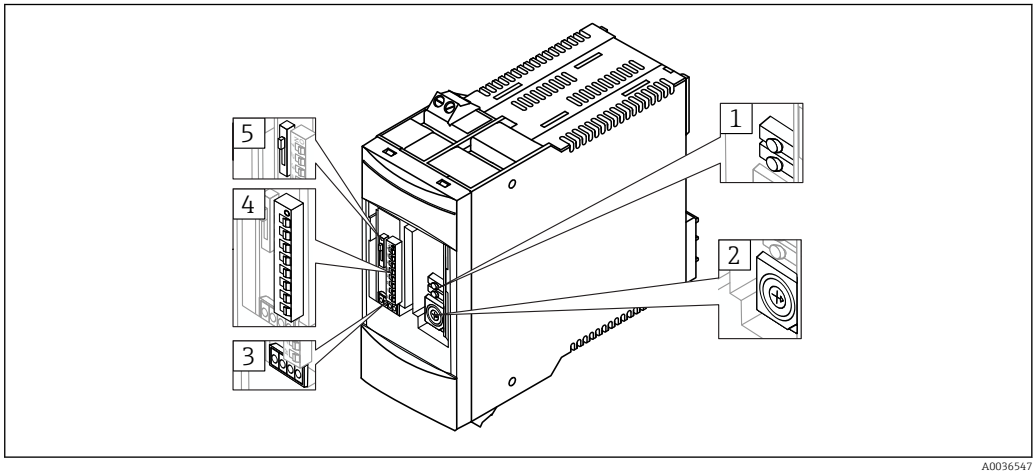

A0036547

1 Calibration button (red, top); correction button (green, bottom)
2 Switch point shift for buildup compensation (16-stage)
3 Light emitting diodes (LEDs)
4 DIL switches: switching delay (3 s, 6 s, 12 s, 24 s) = max. 45 s (1-4); delay when the probe is covered or uncovered (5); no function (6); min/max fail-safe mode (7); no function (8)
5 Calibration with probe covered or uncovered

3-WIRE

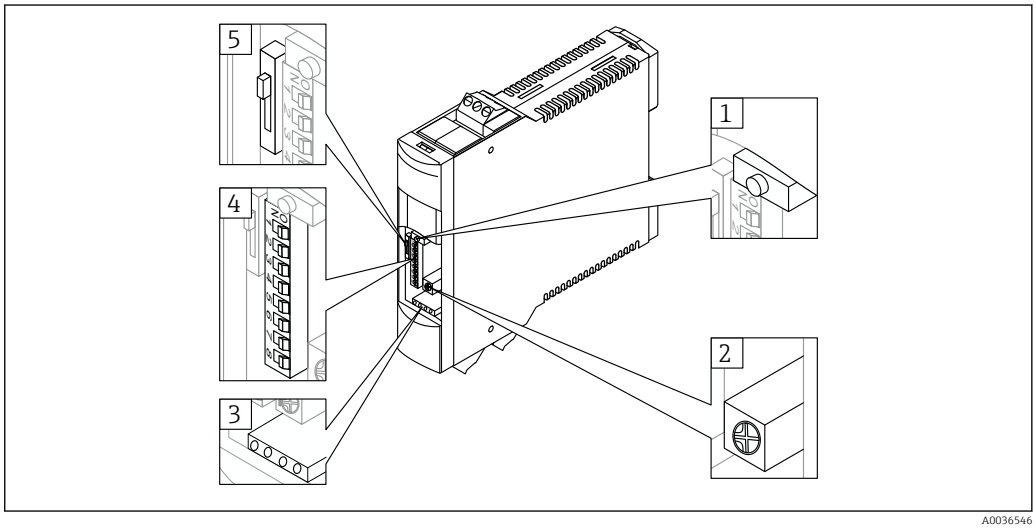

A0036546

1 Calibration button (red)
2 Switch point shift for buildup compensation (continuously)
3 Light emitting diodes (LEDs)
4 DIL switches: switching delay (3 s, 6 s, 12 s, 24 s) = max. 45 s (1-4); delay when the probe is covered or uncovered (5); min/max fail-safe mode (6); two-point controller operation (ON/OFF) (7); calibration switch points (upper/lower) for operation as two-point controller (8)
5 Calibration with probe covered or uncovered

Ordering information

Detailed ordering information is available for your nearest sales organization www.addresses.endress.com or in the Product Configurator under www.endress.com :

1. Click Corporate
2. Select the country
3. Click Products
4. Select the product using the filters and search field
5. Open the product page

The Configuration button to the right of the product image opens the Product Configurator.

Product Configurator - the tool for individual product configuration
- Up-to-the-minute configuration data
- Depending on the device: Direct input of measuring point-specific information such as measuring range or operating language
- Automatic verification of exclusion criteria
- Automatic creation of the order code and its breakdown in PDF or Excel output format
- Ability to order directly in the Endress+Hauser Online Shop

Certificates and approvals

Currently available certificates and approvals can be called up via the product configurator.

CE mark	The measuring device meets the legal requirements of the applicable EU Directives. These are listed in the corresponding EU Declaration of Conformity along with the standards applied. Endress+Hauser confirms successful testing of the device by affixing to it the CE mark.
RCM-Tick mark	The measuring device complies with the EMC requirements of the "Australian Communications and Media Authority (ACMA)".
Ex approval	The Endress+Hauser sales center can provide information on the hazardous area versions currently available. All the data that are relevant for explosion protection are provided in separate documents which can be supplied on request
Type of protection	**Applies for PFM** ▪ II(1)G [Ex ia Ga] IIC ▪ II(1)D [Ex ia Da] IIIC
Overfill prevention	WHG (FTC325 PFM only)
Other standards and guidelines	The applicable European guidelines and standards can be found in the relevant EU Declarations of Conformity. ▪ IEC/EN 60721-3-3: Classification of environmental conditions ▪ IEC/EN 60529: Degrees of protection provided by enclosures (IP code) ▪ IEC/EN 61010: Safety requirements for electrical equipment for measurement, control and laboratory use ▪ IEC/EN 61326: Interference emission (class A equipment), interference immunity (Appendix A - Industrial)

Accessories

Protective housing	The protective housing with IP66 protection is fitted with an integrated DIN rail. The protective housing can be closed with a transparent cover and lead-sealed.

- Dimensions in mm (in) B/H/D: 180/182/165 (7.1/7.2/6.5)
- Part number: 52010132

Supplementary documentation

The following document types are also available in the Download Area of the Endress+Hauser website: www.endress.com → Download

Operating Instructions

Document code	Contents
KA00221F/00/A6 KA00222F/00/A6	Nivotester FTC325 PFM Nivotester FTC325 3-WIRE

Technical Information

Document code	Contents
TI00417F/00/EN	Liquicap M FTI51, FTI52, sensor for point level detection in liquids
TI00418F/00/EN	Solicap M FTI55, FTI56, sensor for point level detection in bulk solids
TI00433F/00/EN	Solicap S FTI77, sensor for point level detection for bulk solids also in combination with very high temperatures

Certificate

Depending on the approval, Safety Instructions are also supplied with the device. They are an integral part of the Operating Instructions. The options in question can be selected in the product structure, "Approval" order code.

Document code	Approval	Option
XA00195F/00/	ATEX II (1) G [Ex ia Ga] IIC, WHG ATEX II (1) D [Ex ia Da] IIIC, WHG	C
XA01351F/00	INMETRO: [Ex ia Ga] IIC/IIB	1
XA01679F/00	EAC [Ex ia Ga] IIC	8



www.addresses.endress.com

Endress+Hauser

People for Process Automation