TSW030

v1.0



Copyright © 2025, UAB TELTONIKA NETWORKS. Specifications and information given in this document are subject to change by UAB TELTONIKA NETWORKS without prior notice.

HARDWARE

FRONT VIEW

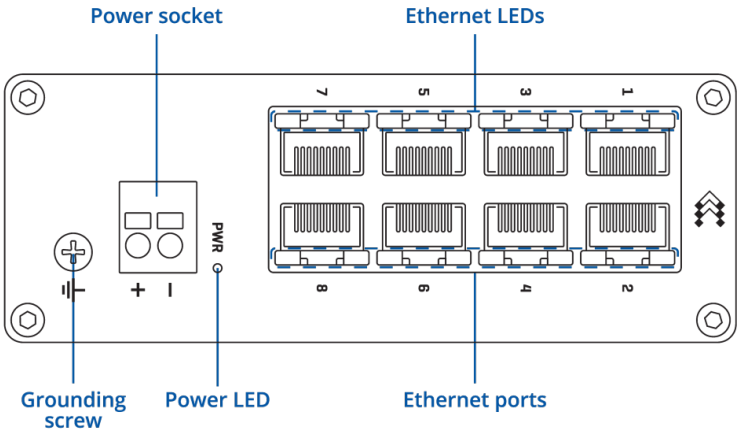

BACK VIEW

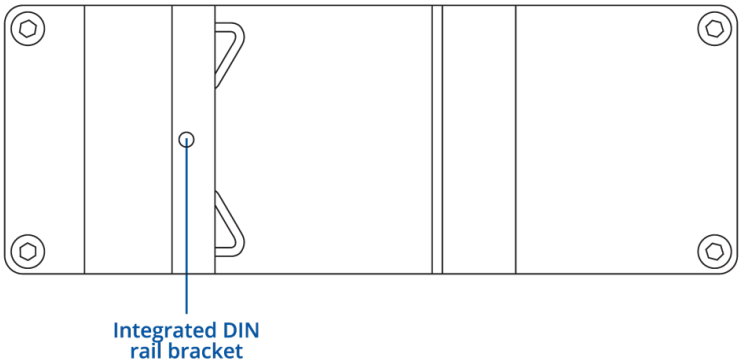

POWER SOCKET PINOUT

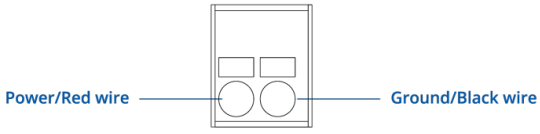

RJ45 LED MEANING



Copyright © 2025, UAB TELTONIKA NETWORKS. Specifications and information given in this document are subject to change by UAB TELTONIKA NETWORKS without prior notice.

FEATURES

Ethernet

Ethernet	8 x ETH ports, 10/100 Mbps, supports auto MDI/MDIX crossover
IEEE 802.3 series standards	802.3i, 802.3u, 802.3ab, 802.3x, 802.3az

INDUSTRIAL PROTOCOLS

Profinet	Profinet Class A conformance (available with optional order code)

Performance Specifications

Bandwidth (Non-blocking)	20 Gbps
Packer buffer	128 KB
MAC address table size	2K entries
Jumbo frame support	9216 bytes

Power

Connector	2-pin industrial DC power socket
Input voltage range	7 – 57 VDC, overvoltage protection: 60Vmax, reverse polarity protection: 80Vmax, surge protection: min 64.4V/max 71.2V breakdown voltage, 93.6V maximum reverse voltage @4.3A maximum reverse surge current, 1- Vin, 2-PGND
Power consumption	Idle: 0.5 W / Max: 1.5 W

Physical Interfaces

Ethernet	8 x RJ45 ports, 10/100 Mbps
Status LEDs	1 x Power LED, 16 x ETH status LEDs
Power	1 x 2-pin industrial DC power socket
Other	1 x Grounding screw

Physical Specification

Casing material	Anodized aluminum housing and panels
Dimensions (W x H x D)	113.1 x 41.2 x 74.6 mm
Weight	256 g
Mounting options	Integrated DIN rail bracket, wall mount, flat surface (additional kit needed)

Copyright © 2025, UAB TELTONIKA NETWORKS. Specifications and information given in this document are subject to change by UAB TELTONIKA NETWORKS without prior notice.

Operating Environment

Operating temperature	-40 °C to 75 °C
Operating humidity	5% to 95% non-condensing
Ingress Protection Rating	IP30

Copyright © 2025, UAB TELTONIKA NETWORKS. Specifications and information given in this document are subject to change by UAB TELTONIKA NETWORKS without prior notice.

ORDERING

STANDARD PACKAGE*



TSW030



QSG (QUICK START GUIDE)

- TSW030
- QSG (Quick Start Guide)
- Packaging box

*Standard package contents may differ based on standard order codes.

For more information on all available packaging options – please contact us directly.

CLASSIFICATION CODES

HS Code: 851762

HTS: 8517.62.00

AVAILABLE VERSIONS

TSW030 *****0	N/A	TSW030000000 / Standard package without PSU
TSW030 *****1 **Profinet Class A conformance**	N/A	TSW030000001 / Standard package without PSU

TSW030 SPATIAL MEASUREMENTS

Copyright © 2025, UAB TELTONIKA NETWORKS. Specifications and information given in this document are subject to change by UAB TELTONIKA NETWORKS without prior notice.

FRONT VIEW

The figure below depicts the measurements of device and its components as seen from the front panel side:

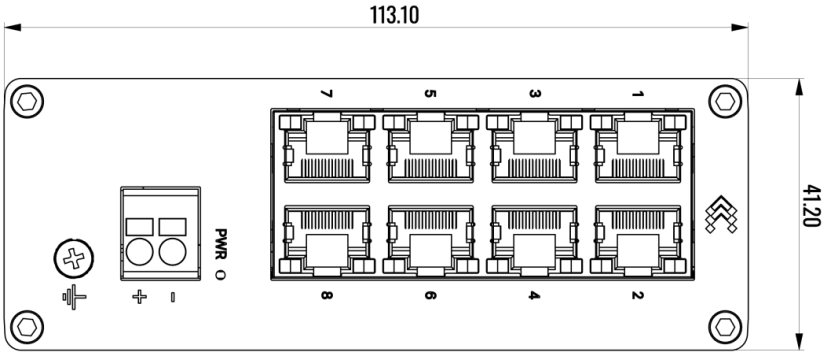

REAR VIEW

The figure below depicts the measurements of device and its components as seen from the back panel side:

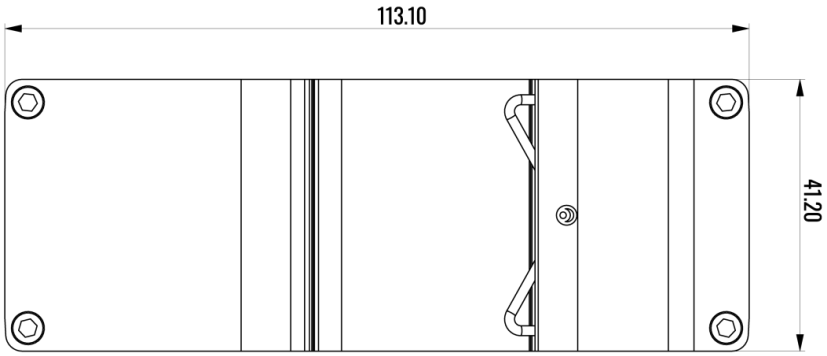

Copyright © 2025, UAB TELTONIKA NETWORKS. Specifications and information given in this document are subject to change by UAB TELTONIKA NETWORKS without prior notice.

LEFT VIEW

The figure below depicts the measurements of device and its components as seen from the left:

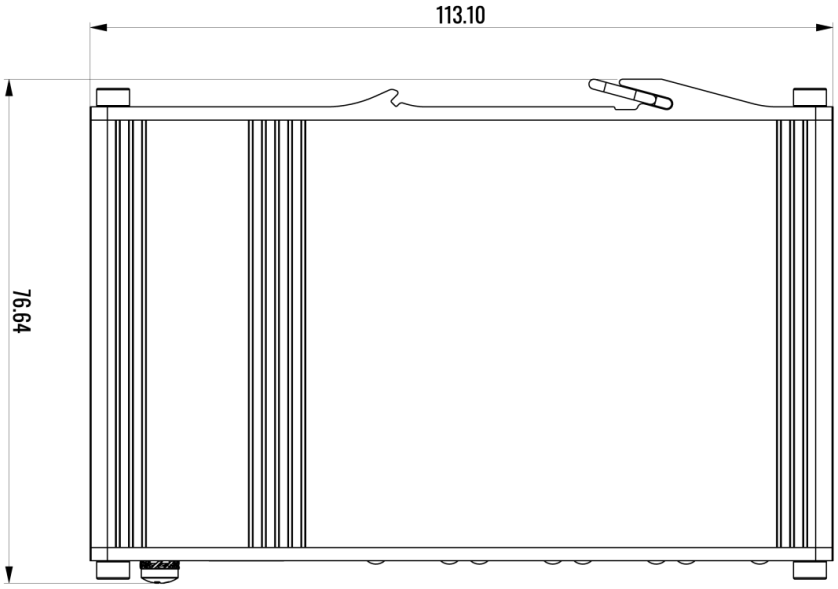

RIGHT VIEW

The figure below depicts the measurements of device and its components as seen from the right:

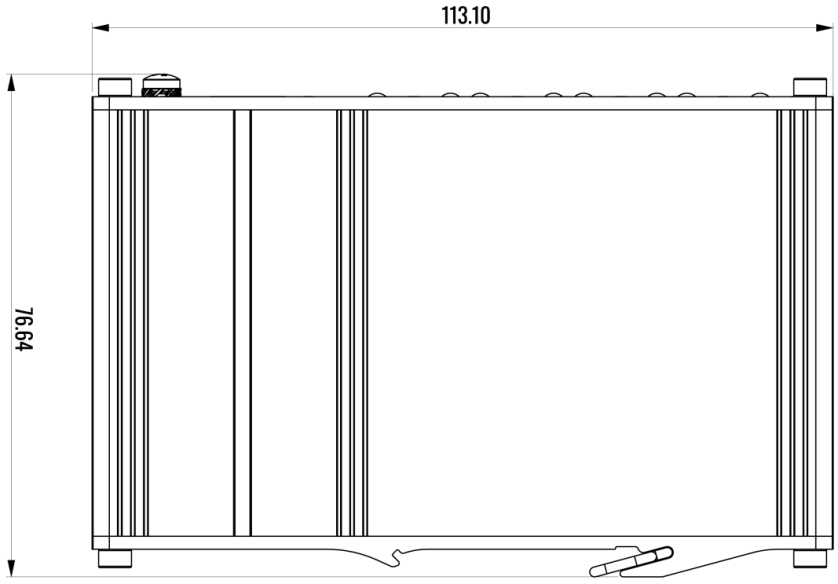

Copyright © 2025, UAB TELTONIKA NETWORKS. Specifications and information given in this document are subject to change by UAB TELTONIKA NETWORKS without prior notice.

MOUNTING SPACE REQUIREMENTS

The figure below depicts an approximation of the device's dimensions when cables and antennas are attached:

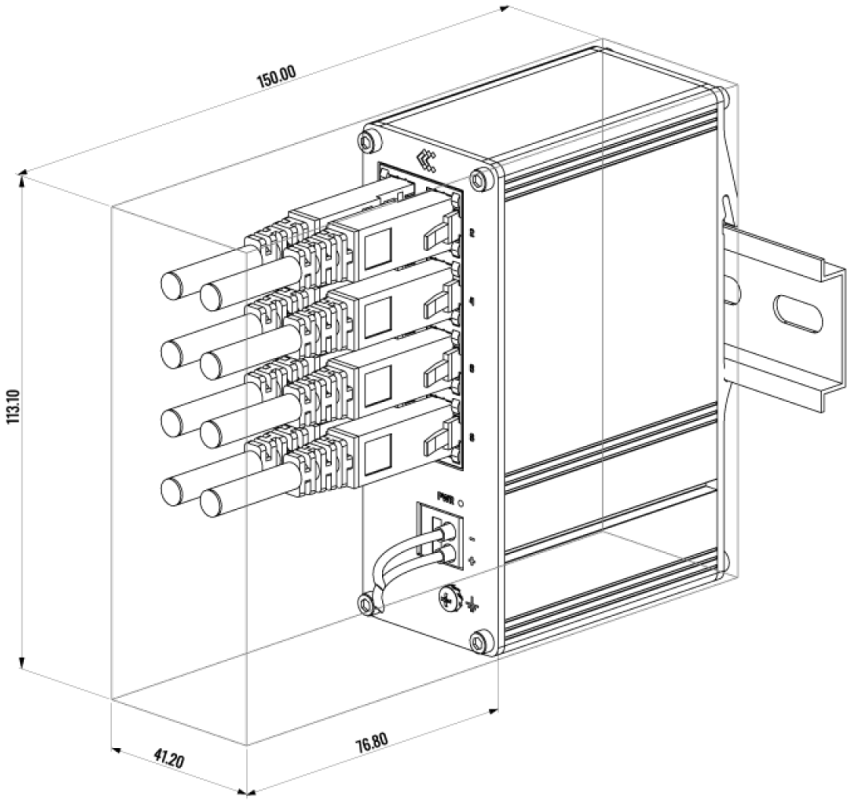

Copyright © 2025, UAB TELTONIKA NETWORKS. Specifications and information given in this document are subject to change by UAB TELTONIKA NETWORKS without prior notice.