DATASHEET - M22-I1



Surface mounting enclosure, 1 mounting location

Part no.	**M22-I1**
Catalog No.	**216535**
Alternate Catalog No.	**M22-I1Q**
EL-Nummer (Norway)	**4355383**

Delivery program

Basic function accessories			Surface mounting enclosure
Housing			Insulated material
			With high-grade steel screws
Number of locations		Qty.	1
Cable entry knockouts			
Cable entry			rear: 2 x M16 at top: 1 x M20 lateral: 2 x M20/M25 (1 x each side)
Degree of Protection			IP66, IP67, IP69
Colour			
			
RAL Value			RAL 7035
Colour			Enclosure base anthracite
Connection to SmartWire-DT			no
For use with			1 x ∅ 22.5
For use with			(Illuminated) pushbuttons (Illuminated) selector switches Key-operated pushbuttons Indicator light controlled stop/emergency-stop buttons with yellow label

Technical data

General

Degree of Protection			IP66, IP67, IP69
Ambient temperature			
Open		°C	-25 - +70

Design verification as per IEC/EN 61439

Technical data for design verification			
Operating ambient temperature min.		°C	-25
Operating ambient temperature max.		°C	70
IEC/EN 61439 design verification			
10.2 Strength of materials and parts			
10.2.2 Corrosion resistance			Meets the product standard's requirements.
10.2.3.1 Verification of thermal stability of enclosures			Meets the product standard's requirements.
10.2.3.2 Verification of resistance of insulating materials to normal heat			Meets the product standard's requirements.
10.2.3.3 Verification of resistance of insulating materials to abnormal heat and fire due to internal electric effects			Meets the product standard's requirements.
10.2.4 Resistance to ultra-violet (UV) radiation			Please enquire
10.2.5 Lifting			Does not apply, since the entire switchgear needs to be evaluated.
10.2.6 Mechanical impact			Does not apply, since the entire switchgear needs to be evaluated.
10.2.7 Inscriptions			Meets the product standard's requirements.
10.3 Degree of protection of ASSEMBLIES			Does not apply, since the entire switchgear needs to be evaluated.

10.4 Clearances and creepage distances			Meets the product standard's requirements.
10.5 Protection against electric shock			Does not apply, since the entire switchgear needs to be evaluated.
10.6 Incorporation of switching devices and components			Does not apply, since the entire switchgear needs to be evaluated.
10.7 Internal electrical circuits and connections			Is the panel builder's responsibility.
10.8 Connections for external conductors			Is the panel builder's responsibility.
10.9 Insulation properties			
10.9.2 Power-frequency electric strength			Is the panel builder's responsibility.
10.9.3 Impulse withstand voltage			Is the panel builder's responsibility.
10.9.4 Testing of enclosures made of insulating material			Is the panel builder's responsibility.
10.10 Temperature rise			The panel builder is responsible for the temperature rise calculation. Eaton will provide heat dissipation data for the devices.
10.11 Short-circuit rating			Is the panel builder's responsibility. The specifications for the switchgear must be observed.
10.12 Electromagnetic compatibility			Is the panel builder's responsibility. The specifications for the switchgear must be observed.
10.13 Mechanical function			The device meets the requirements, provided the information in the instruction leaflet (IL) is observed.

Technical data ETIM 7.0

Low-voltage industrial components (EG000017) / Enclosure for control circuit devices (EC000200)

Electric engineering, automation, process control engineering / Low-voltage switch technology / Command and alarm device / Housing for command and alarm devices (ecl@ss10.0.1-27-37-12-05 [AKF023014])

Number of command positions			1
Construction type housing			Surface mounting housing
Material housing			Plastic
Material quality housing			Other
Diameter openings		mm	22
Colour housing cover			Grey
Degree of protection (IP)			IP67/IP69K
Degree of protection (NEMA)			4X
Width		mm	72
Height		mm	80
Depth		mm	56

Approvals

Product Standards			IEC/EN 60947-5; UL 508; CSA-C22.2 No. 14-05; CSA-C22.2 No. 94-91; CE marking
UL File No.			E29184
UL Category Control No.			NKCR
CSA File No.			012528
CSA Class No.			3211-03
North America Certification			UL listed, CSA certified
Degree of Protection			UL/CSA Type 3R, 4X, 12, 13

Dimensions

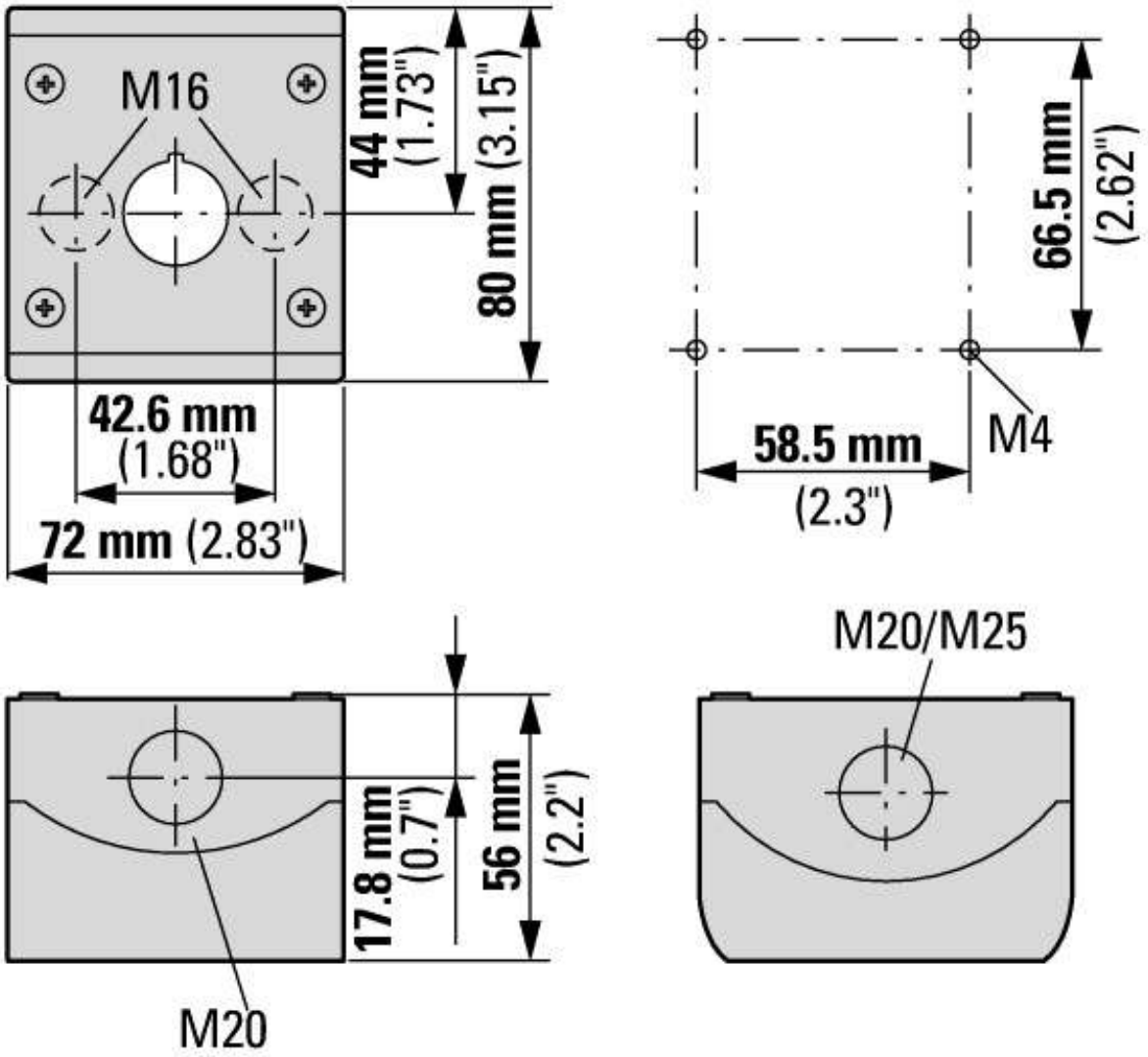

Premoulded cable entry: bottom 2 x M16, top: 1 x M20, side: 2 x M20/M25 (per side 1 x)

Assets (links)

Declaration of CE Conformity
00003256

Instruction Leaflets
IL04716003Z2018_06

© 10/2019 by Eaton Industries GmbH