10,4" industrial display



- 10,4" brilliant TFT-LCD graphic display, 1024 x 768 pixels
- Robust aluminium housing, low installation depth
- High protection class IP65, flush-mounted design
- HDMI, DVI and VGA interface

Description

The industrial displays in sizes from 10.1" to 23.8" are optionally available with projected capacitive touch, resitive touch or without touch.
The front of the housing is IP65 rated and, thanks to the specially designed aluminium housing, has a very compact and robust design. The low installation depth means that the displays can be used almost anywhere.

Product details

Power supply:	12 VDC to 36 VDC
Power consumption:	typical power consumption: 18 W aximum power consumption: 48 W
Display:	10,4" TFT-LCD
Resolution:	1024 x 768 pixels
Aspect ratio:	4:3
Brightness:	300 cd/m²
Colours:	16,7 million
View angle:	H: 80° / V: 80°
Touchscreen:	• projected capacitive touch • resistive touch • without touch
Glas hardness:	6H
I/O ports:	USB: RJ45-USB for touch Display: 1x HDMI, 1x DVI, 1x VGA Audio output: 3,5 mm
Housing:	Robust aluminum case
Mounting:	VESA 100 x 100 and/or 75 x 75 Panel mount
Protection class:	IP65 from the front
Weight:	approx. 2,0 kg
Dimensions (WxHxD):	288 mm x 231 mm x 51,5 mm
Environmental conditions:	Operation: -10 °C to +65 °C Storage: -20 °C to +75 °C 10 % to 80 %.rFn at 40 °C, non condensing
Certification:	CE FCC Class A CCC
Packing list:	1x Display 1x Embedded brackets 1x RJ-45 to USB cable 1x VGA cable
Customs tariff number:	85285210

Manufacturer:	Wachendorff Prozesstechnik

Order-No. Product

DPL002-104N002P	10,4" industrial display, without touch
DPL002-104R002P	10,4" industrial display, resistive touch
DPL002-104C002P	10,4" industrial display, projected capacitive touch

Order-No. Accessories

360.017.000.012	Power cord for ext. power supply
BZ.36.010.2000022	External power supply, 230 VAC to 12 VDC
JWS-ZJ01	Industrial monitor/display stand , VESA 100x100, black
JWS-ZJ02	Industrial monitor/display stand , VESA 100x100, silver

Drawings

Dimensions (mm) and STL-Data/Viewer:

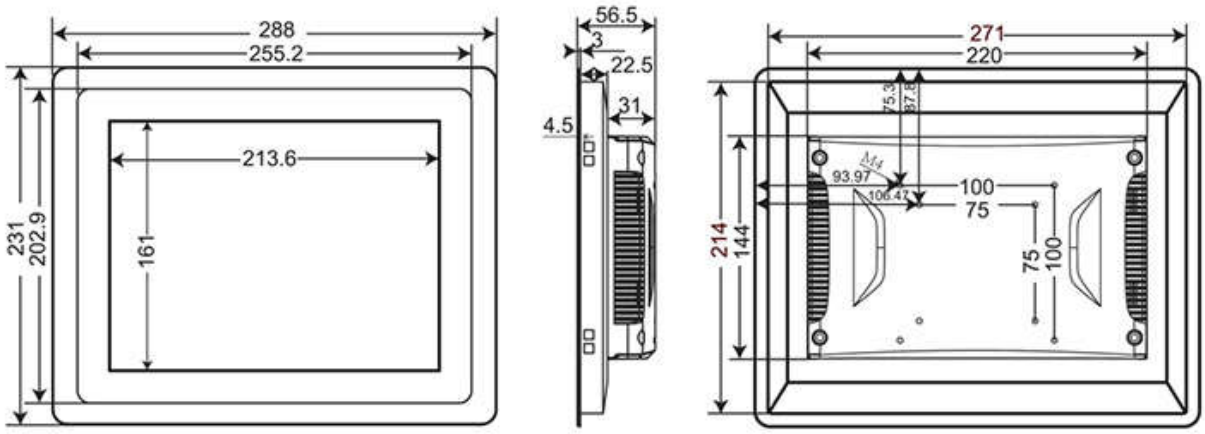

WACHENDORFF
Prozesstechnik GmbH & Co. KG

Wachendorff Prozesstechnik GmbH & Co. KG
Industriestrasse 7 • 65366 Geisenheim
Germany

Tel: +49 (0) 67 22 / 99 65 - 20
E-Mail: wp@wachendorff.de
www.wachendorff-prozesstechnik.de