Protective stand for Orion Light Guards

Orion Stand

Application:

- Protection of light curtains, light grids and mirrors against shocks and collisions

Features:

- For all Orion light guards and Orion1 Mirror
- Robust extruded aluminum column
- Sturdy steel base
- Spirit level for adjustment



Orion Stand is used to protect any Orion light guard against shock and collision. Orion Stand is made of an extruded aluminum column with a steel base. Orion Stand can also be used with the deviating mirrors Orion1 Mirror.

Easy adjustment

The base is made of two plates. Both their inclination and their angular position can be adjusted. A spirit level facilitates the adjustment. Equipped with springs, Orion Stand Plate can be used to absorb vibrations and compensate uneven floor surfaces. Orion Stand Plate is available as an accessory.

How to order

The Orion protective stands are available in different lengths and compatible with all the Orion light guards. A mounting kit is necessary to mount the light guard in the stand. Which kit depends on the model of light guard and its length. See the ordering information in order to choose the right kit.

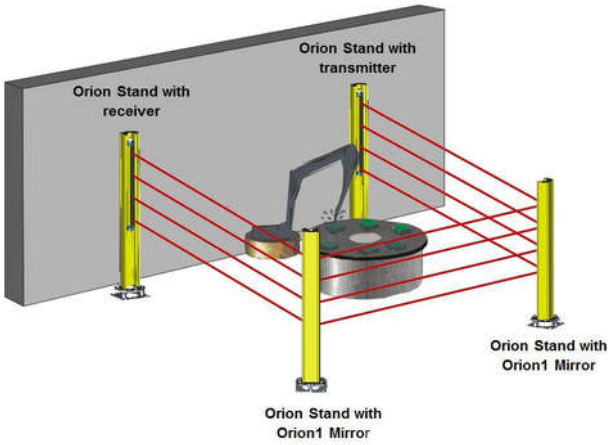

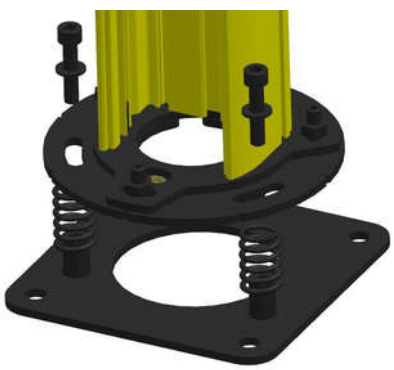

Orion stand with Orion Stand Plate

Ordering information and dimensions

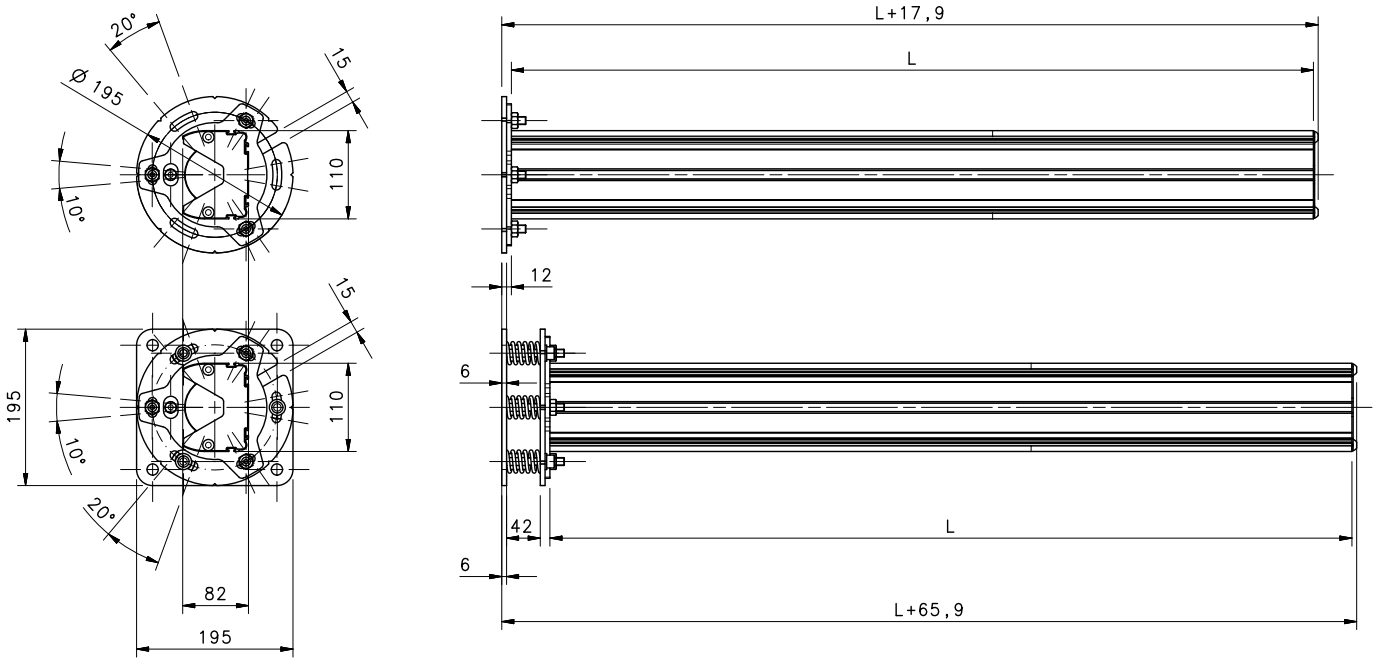

All dimensions in mm

Article number	Model	L (mm)
2TLA022312R0000	Orion Stand 060	600
2TLA022312R0100	Orion Stand 100	1000
2TLA022312R0200	Orion Stand 120	1200
2TLA022312R0300	Orion Stand 165	1650
2TLA022312R0400	Orion Stand 190	1900

Accessories

Article number	Model	Description
2TLA022310R0400	JSM Orion06	Kit for mounting Orion1 and Orion2 in Orion Stand (4 brackets)
2TLA022310R0500	JSM Orion07	Kit for mounting Orion1 and Orion2 in Orion Stand (6 brackets)
2TLA022310R0600	JSM Orion08	Kit for mounting Orion3 in Orion Stand (4 brackets)
2TLA022310R0700	JSM Orion09	Kit for mounting Orion3 in Orion Stand (6 brackets)
2TLA022310R0900	JSM Orion11	Kit for mounting Orion1 Mirror in Orion stand
2TLA022312R5000	Orion Stand Plate	Kit for adjustment of Orion stand

Correspondence with Orion Stand

Orion model	Mounting kit	Orion Stand 060	Orion Stand 100	Orion Stand 120	Orion Stand 165	Orion Stand 190
Orion1-4-xx-015-B	JSM Orion06	X	X	X	X	X
Orion1-4-xx-030-B	JSM Orion06	X	X	X	X	X
Orion1-4-xx-030-E	JSM Orion06	X	X	X	X	X
Orion1-4-xx-045-B	JSM Orion06	X	X	X	X	X
Orion1-4-xx-045-E	JSM Orion06	X	X	X	X	X
Orion1-4-xx-060-B	JSM Orion06		X	X	X	X
Orion1-4-xx-060-E	JSM Orion06		X	X	X	X
Orion1-4-xx-075-B	JSM Orion06		X	X	X	X
Orion1-4-xx-075-E	JSM Orion06		X	X	X	X
Orion1-4-xx-090-B	JSM Orion06			X	X	X
Orion1-4-xx-090-E	JSM Orion06			X	X	X
Orion1-4-xx-105-B	JSM Orion06			X	X	X
Orion1-4-xx-105-E	JSM Orion06			X	X	X
Orion1-4-xx-120-B	JSM Orion07				X	X
Orion1-4-xx-120-E	JSM Orion07				X	X
Orion1-4-xx-135-B	JSM Orion07				X	X
Orion1-4-xx-135-E	JSM Orion07				X	X
Orion1-4-xx-150-B	JSM Orion07				X	X
Orion1-4-xx-150-E	JSM Orion07				X	X
Orion1-4-xx-165-B	JSM Orion07					X
Orion1-4-xx-165-E	JSM Orion07					X
Orion1-4-xx-180-B	JSM Orion07					X [1]
Orion1-4-xx-180-E	JSM Orion07					X [1]
Orion2-4-K2-050-B	JSM Orion06		X	X	X	X
Orion2-4-K3-080-B	JSM Orion06			X	X	X
Orion2-4-K4-090-B	JSM Orion06				X	X
Orion2-4-K4-120-B	JSM Orion07				X	X
Orion3-4-K1C-050-B	JSM Orion08		X	X	X	X
Orion3-4-K2C-080-B	JSM Orion08			X	X	X
Orion3-4-K2C-090-B	JSM Orion08				X	X
Orion3-4-K2C-120-B	JSM Orion09				X	X
Orion3-4-M1C-050	JSM Orion08		X	X	X	X
Orion3-4-M2C-080	JSM Orion08			X	X	X
Orion3-4-M2C-090	JSM Orion08				X	X
Orion3-4-M2C-120	JSM Orion09				X	X
Orion1 Mirror 060	JSM Orion11	X	X	X	X	X
Orion1 Mirror 090	JSM Orion11		X	X	X	X
Orion1 Mirror 120	JSM Orion11			X	X	X
Orion1 Mirror 165	JSM Orion11				X	X
Orion1 Mirror 190	JSM Orion11					X

[1] Fits if Orion Stand Plate is used.

Note: when using an Orion2 or Orion3 in an Orion Stand (body detection), the height of the lowest beam should be 300 mm max and the height of the uppermost beam should 900 mm min.

Contact us

ABB AB
Jokab Safety
Varlabergsvägen 11
SE-434 39 Kungsbacka
Tel. +46 (0) 21-32 50 00

www.abb.com/jokabsafety

Note
We reserve the right to make technical changes or modify the contents of this document without prior notice. With regard to purchase orders, the agreed particulars shall prevail. ABB does not accept any responsibility whatsoever for potential errors or possible lack of information in this document.

We reserve all rights in this document and in the subject matter and illustrations contained therein. Any reproduction, disclosure to third parties or utilization of its contents - in whole or in parts – is forbidden without prior written consent of ABB.

Copyright© 2015 ABB
All rights reserved

3KX1234567

2TLC172059L0201

Power and productivity
for a better world™