SR5900

Control monitor for flow sensors

SRM12XXBFPKG/

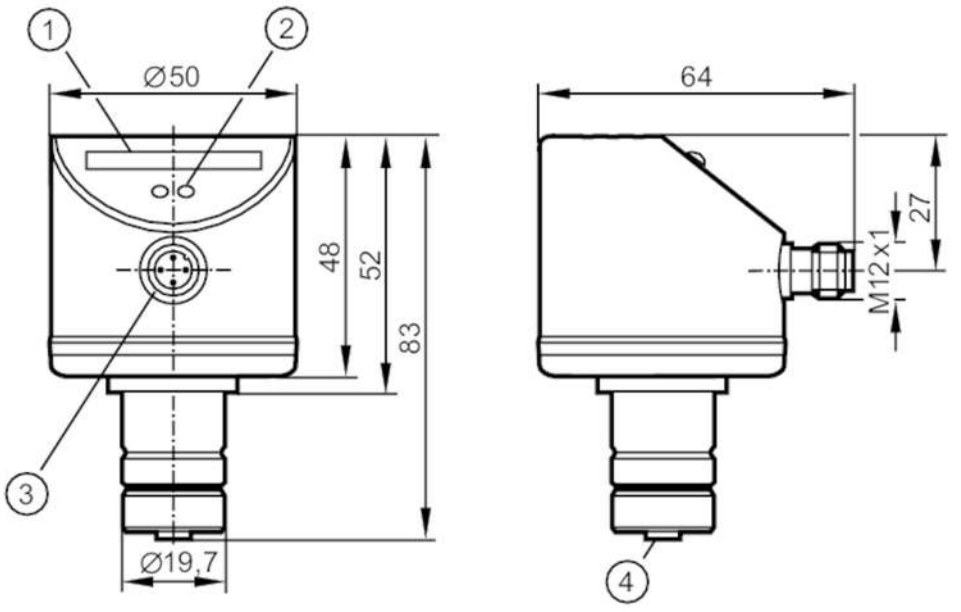

1 LED bar display
2 setting pushbutton
3 connection for voltage supply and output signals
4 connection for flow sensor

Application		
Application		Flow monitoring; Wire monitoring
Electrical data		
Operating voltage	[V]	19...36 DC
Current consumption	[mA]	< 70
Protection class		III
Reverse polarity protection		yes
Power-on delay time	[s]	10
Number of channels		1
Outputs		
Electrical design		PNP
Max. voltage drop switching output DC	[V]	2.5
Permanent current rating of switching output DC	[mA]	250
Switching function flow monitoring		output switches when flow is present: ON for output function = normally open / OFF for output function = normally closed
Short-circuit protection		yes
Overload protection		yes
Software / programming		
Adjustment of the switch point		pushbutton

SR5900

Control monitor for flow sensors

SRM12XXBFPKG/

Operating conditions			
Ambient temperature	[°C]	-20...60	
Protection		IP 67; (with sensor attached)	
Tests / approvals			
EMC		EN 61000-4-2 ESD	4 kV CD / 8 kV AD
		EN 61000-4-3 HF radiated	10 V/m
		EN 61000-4-4 Burst	2 kV
		EN 61000-4-6 HF conducted	10 V
Shock resistance		DIN IEC 68-2-27	30 g (6 ms)
Vibration resistance		DIN IEC 68-2-6	5 g (55...2000 Hz)
MTTF	[years]	342	
Mechanical data			
Weight	[g]	225.5	
Housing		cylindrical	
Dimensions	[mm]	Ø 50 / L = 83	
Materials		stainless steel (316L/1.4404); stainless steel (304/1.4301); PC; PBT-GF20; EPDM/X; brass	
Displays / operating elements			
Display		function	LED, bar graph
		switching status	LED, orange flash in case of wire break
Remarks			
Remarks		Connection for flow sensor without short-circuit protection / reverse polarity protection.	
		The flow sensor must be directly connected to the control monitor.	
		A connection by means of extension cables is not allowed.	
Pack quantity		1 pcs.	

Electrical connection

Connector: 1 x M12; coding: A



SR5900

Control monitor for flow sensors

SRM12XXBFPKG/

Connection

