ID5063

Inductive sensor

ID-3050-BPKG/PP/US-100-DPS

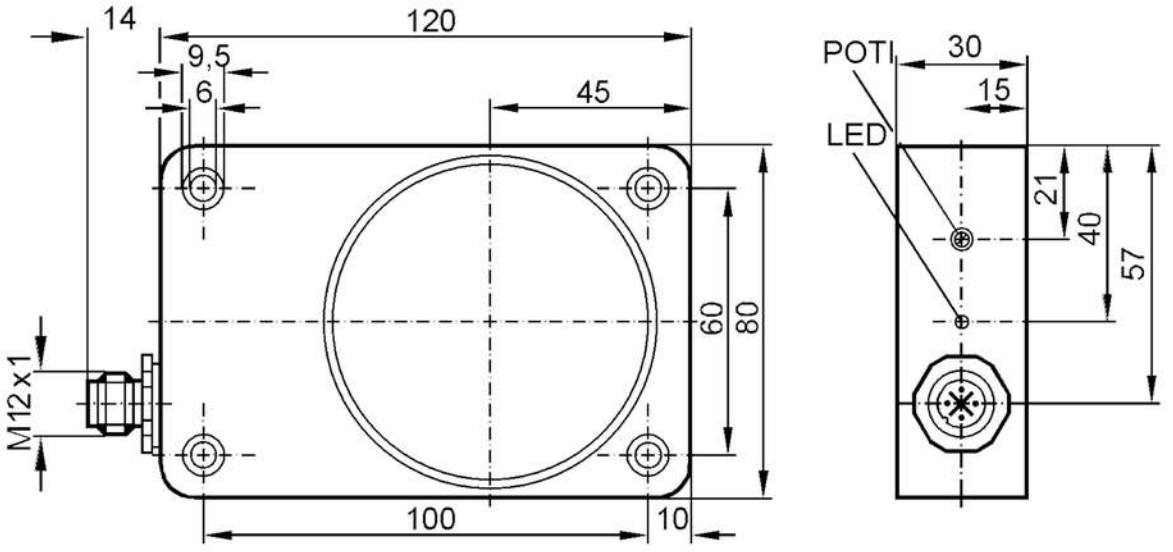

Product characteristics		
Electrical design		PNP
Output function		normally open
Sensing range	[mm]	50
Housing		rectangular
Dimensions	[mm]	120 x 80 x 30
Application		
Special feature		Gold-plated contacts
Electrical data		
Operating voltage	[V]	10...36 DC
Current consumption	[mA]	15; (24 V)
Protection class		II
Reverse polarity protection		yes
Outputs		
Electrical design		PNP
Output function		normally open
Max. voltage drop switching output DC	[V]	2.5
Permanent current rating of switching output DC	[mA]	250
Switching frequency DC	[Hz]	8
Short-circuit protection		yes
Type of short-circuit protection		pulsed

ID5063

Inductive sensor

ID-3050-BPKG/PP/US-100-DPS

Overload protection		yes	
Detection zone			
Sensing range	[mm]	50	
Sensing range adjustable		yes	
Factory setting sensing range	[mm]	50	
Real sensing range Sr	[mm]	50 ± 10 %	
Operating distance	[mm]	0...40.5	
Accuracy / deviations			
Correction factor		steel: 1 / stainless steel: 0.7 / brass: 0.5 / aluminium: 0.4 / copper: 0.3	
Hysteresis	[% of Sr]	1...15	
Switch point drift	[% of Sr]	-10...10	
Operating conditions			
Ambient temperature	[°C]	-25...80	
Protection		IP 67	
Tests / approvals			
EMC		EN 60947-5-2	
		EN 55011	class B
MTTF	[years]	1390	
Mechanical data			
Weight	[g]	479.5	
Housing		rectangular	
Mounting		non-flush mountable	
Dimensions	[mm]	120 x 80 x 30	
Materials		housing: PP black; sensing face: PP black	
Displays / operating elements			
Display		switching status	1 x LED, yellow
Accessories			
Items supplied		screwdriver: 1	
Remarks			
Pack quantity		1 pcs.	
Electrical connection - plug			

Connector: 1 x M12; coding: A; Locking: stainless steel (1.4571/316Ti); Contacts: gold-plated

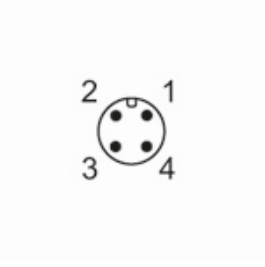

ID5063

Inductive sensor

ID-3050-BPKG/PP/US-100-DPS

Connection

