Rocker Switch

Single Pole

SR Series – SRB



Features

- Self-locking tabs
- Minimum 100,000 operations mechanical life
- RoHS compliant

Standard Parts[1]

North America and Europe

SRB22A2BBBNN	SRB22A2DBBNN	SRB22A2FBBNN	SRB22A2FBRNN	SRB23A2BBBNN

[1]The part number configuration matrix below provides details to the part numbers above. For configurable part numbers that are not listed above, contact the factory or your distributor.

Part Number Breakdown

SRB22A2BBBNN

SR B 2 2 A 2

Series	Contact Rating[1]	Circuitry		Switch Function		Terminal Type		Actuator Type	
SR	B	2	Single pole	2	ON-OFF	A	4.8 mm (0.187”) quick connect	2	Curved
				3	ON-ON	B	PC left angle		
				4	ON-OFF-ON	C	PC straight		
						D	4.7 mm x 2.7 mm (0.185” x 0.106”) solder tag		
						E	PC right angle		
						P	7.0 mm x 3.4 mm (0.275” x 0.134”) solder tag		

[1]See Electrical Specifications section

B B B N N

Actuator Marking		Housing Color		Actuator Color		Lighted		Body Type	
B	Blank	B	Black	B	Black	N	Non-lighted	N[2]	No Rocker Boot
C	HI LO	W	White	R	Red				
D	ON OFF	Y	Grey	W	White				
E	O I			Y	Grey				
F	I O								
G	●								
H	I O II								

[2]A splash-proof boot can be ordered separately as part number 00150751

Electrical Specifications

Inrush Rating – 2 Position	48 A	
Dielectric Strength	1000 VAC for 1 minute	
Insulation Resistance	100 MΩ min at 500 VDC	
Initial Contact Resistance	0.020 Ω max	
Switch Function:	EN61058-1 Rating:	UL General Purpose Rating:
2, 3	10 (4) A 250 VAC ~ T125/55	10 A 125 VAC / 6 A 250 VAC
4	10 (4) A 250 VAC ~µ T125/55	10 A 125 VAC / 6 A 250 VAC
Electrical Life at Rated Load		
Minimum Operations:	VDE:	UL:
Switch Function 2	50,000	6,000
Switch Function 3, 4	10,000	6,000
UL File No: E23301		

Material and Environmental Specifications

Actuator	Nylon 66 94V-2
Base	Nylon 66 94V-2
Spring	Steel Wire
Contacts	Silver or Copper Alloy
Movable Arm	Silver-Plated Copper Alloy
Terminals	Tin-Plated Copper Alloy
Operating Temperature Range	-20 ^{O}C to +65 ^{O}C (-4 ^{O}F to +149 ^{O}F)

Circuitry and Switch Functions

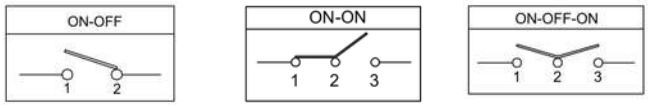

Dimensions mm (inches)

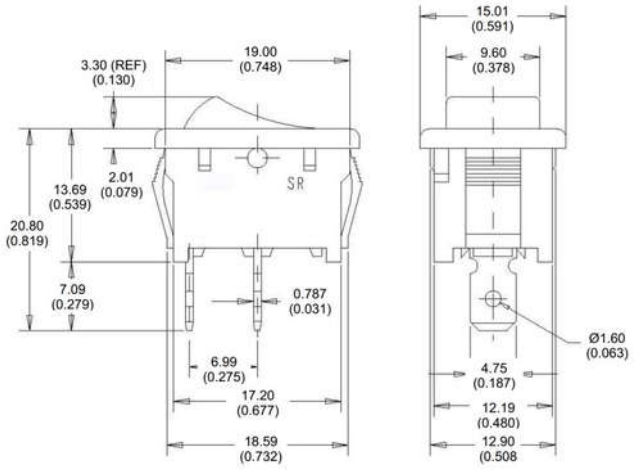

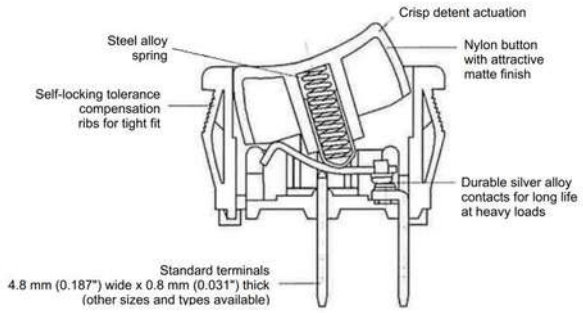

Recommended Panel Cut-Out Dimensions

Panel thickness	X Dimension	Y dimension
0.75 to 1.25 (0.30 to 0.049)	19.2 +0.1/-0 (0.752)	12.90 +0/15/-0 (0.508)
1.25 to 2.00 (0.049 to 0.079)	19.4 +0.1/-0 (0.760)	12.90 +0/15/-0 (0.508)
2.00 to 3.00 (0.079 to 0.118)	19.8 +0.1/-0 (0.775)	12.90 +0/15/-0 (0.508)