BRACKETS

All Brackets are Hot Dip Galvanised finish to BS 729 and material thickness is 6mm (Unless otherwise stated).

5mm thick

RS 176-056

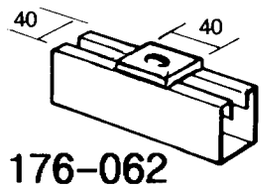

RS 176-062

EXTERNAL
6, 8, 10 and 12mm clearance

F101 Weight 0·05 Kg

RS 176-107

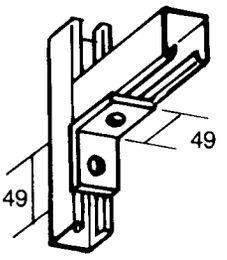

A200 Weight 0·13 Kg

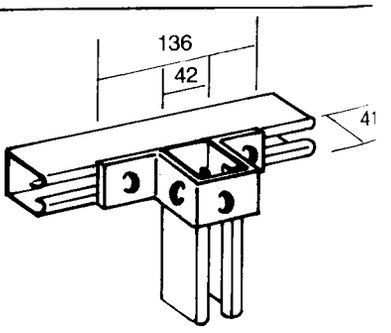

RS 176-135

U401 Weight 0·31 Kg

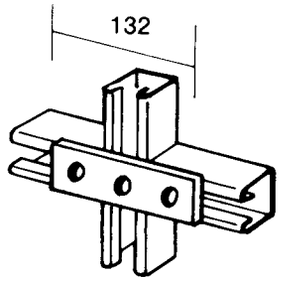

RS 176-078

F103 Weight 0·24 Kg

RS 176-113

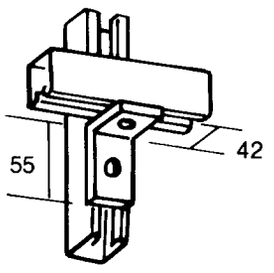

A201 Weight 0·13 Kg

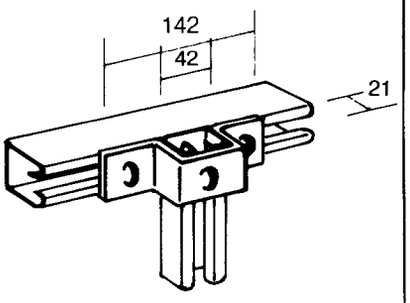

RS 176-129

U400 Weight 0·21 Kg

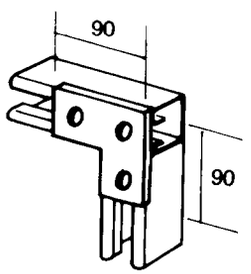

RS 176-084

F107 Weight 0·21 Kg

RS 176-163

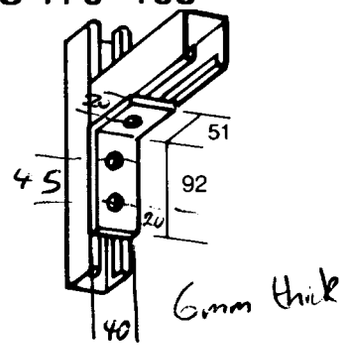

A203 Weight 0·21 Kg

NOTE: Suffix reference denotes depth of channel.

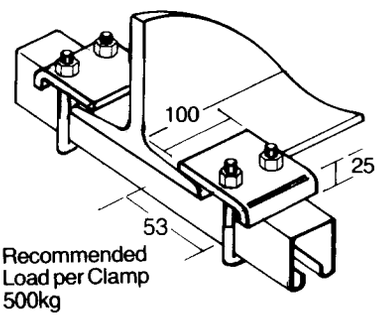

Recommended Load per Clamp 500kg

Clamp Weight 0·26 Kg

RS 176-141 **C701/21**
RS 176-157 **C701/41**

RS 176-090

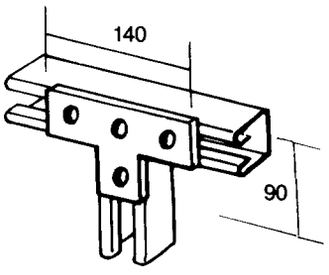

F108 Weight 0·29 Kg

RS 176-179

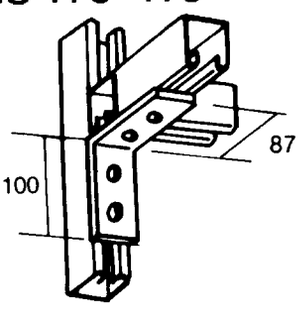

A205 Weight 0·29 Kg