87045 LIMOGES Cedex
Telephone: (+33) 05 55 06 87 87 - Fax: (+33) 05 55 06 88 88

# 19" LCS² freestanding cabinets

**Catalogue number(s): 0 463 00/06/12/18/19/21/22/23**
**0 463 28/29/30/33/34/35/41/42/43**





**CONTENTS** Page

1. General features. . . . . 1
2. Range. . . . . 3
3. Technical features . . . . . 4
4. Dimensions. . . . . 5
5. Baying. . . . . 10
6. Plinths. . . . . 12
7. Cable management . . . . . 17
8. Vertical extension . . . . . 20
9. Thermal management . . . . . 21
10. Accessories . . . . . 22
11. 19" equipment . . . . . 24
12. Power distribution. . . . . 27

## 1. GENERAL FEATURES

19" LSC² freestanding cabinets are intended for digital infrastructures.

19" LCS² cabinets are metal and provide IP20 - IK08 protection. They have a single or double screen-printed curved glass door and are finished throughout in charcoal grey RAL 7016.

19" LSC² cabinets can be joined together, either directly or via a cabling unit, and can be equipped with a modular plinth.

Equipment and accessories for cable management, vertical extension, thermal management, etc. complete the range.

### 1.1 Presentation

The main parts of 19" LCS² freestanding cabinets are:
- A framework consisting of 4 uprights and 2 end plates
- A single or double screen-printed curved glass front door
- 2 side panels (excluding extension cabinets)
- A rear panel
- 4 x 19" uprights

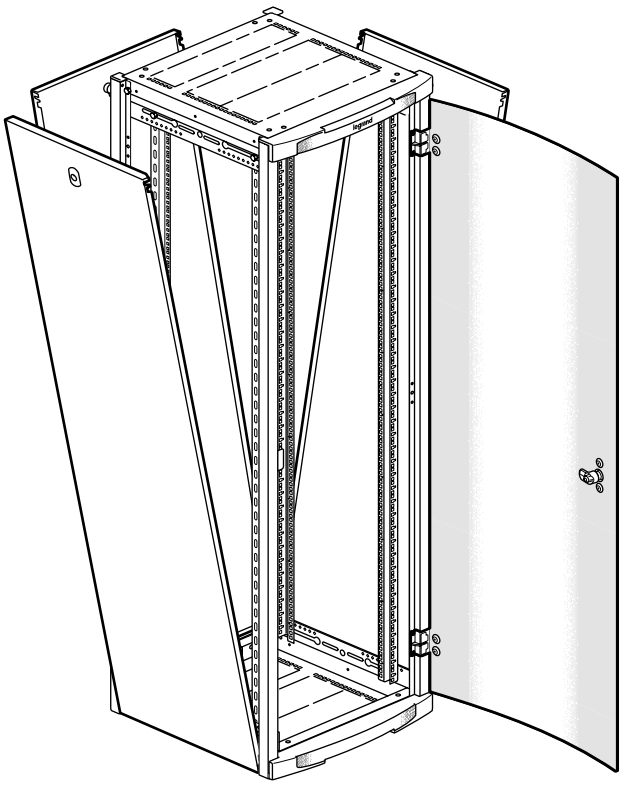

## 1. GENERAL FEATURES *(continued)*

### 1.1 Presentation *(continued)*

The 4 structural uprights and the 2 end plates form a metal framework that is screwed together. The cabinet can be dismantled completely if access is difficult.

The end plates contain the cabinet's cable entries. Their configuration, which is identical for the top and the bottom, is dependent on the dimensions of the cabinet:

| (mm) | Width 600 | Width 800 |
|---|---|---|
| Depth 600 | 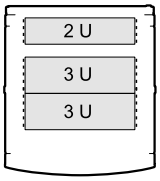 | 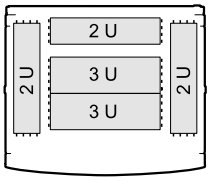 |
| Depth 800 | 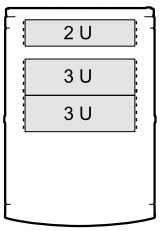 | 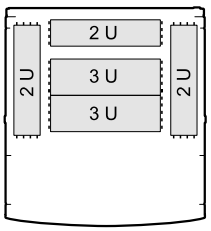 |
| Depth 1000 | | 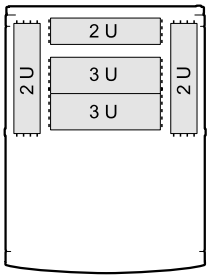 |



Each cable entry is pre-cut in 19" format in order to be equipped with a cable entry plate (see section 7.1).

The whole structure stands on 4 levelling feet that can be adjusted from the inside and the outside of the cabinet.

## 1. GENERAL FEATURES *(continued)*

**1.1 Presentation** *(continued)*

The single front door comprises:
- Curved colourless transparent glass with "pixel" screen-printing on the vertical edges
- A handle equipped with a 2433A key lock
- 2 metal hinges (3 for 47U height)

The double front door comprises:
- Two half-doors made of curved colourless transparent glass with "pixel" screen-printing on the external vertical edges
- A locking bolt located at the top of each half-door
- Two metal hinges on each half-door

Doors are removable and single door is reversible.
Locks are compatible with key barrels (other key codes) and inserts Cat. Nos. 0 368 13/16/17/18/19/20/22/23/24/25/26/27.

For a perfect finish, 2 fascia trims, clipped onto the end plates, continue the "pixel" design from the door. The upper trim carries the Legrand name.

The side and rear metal panels are equipped with:
- A 2433A locking bolt
- A stainless steel equipotential link clip

Each panel is removable for total accessibility:

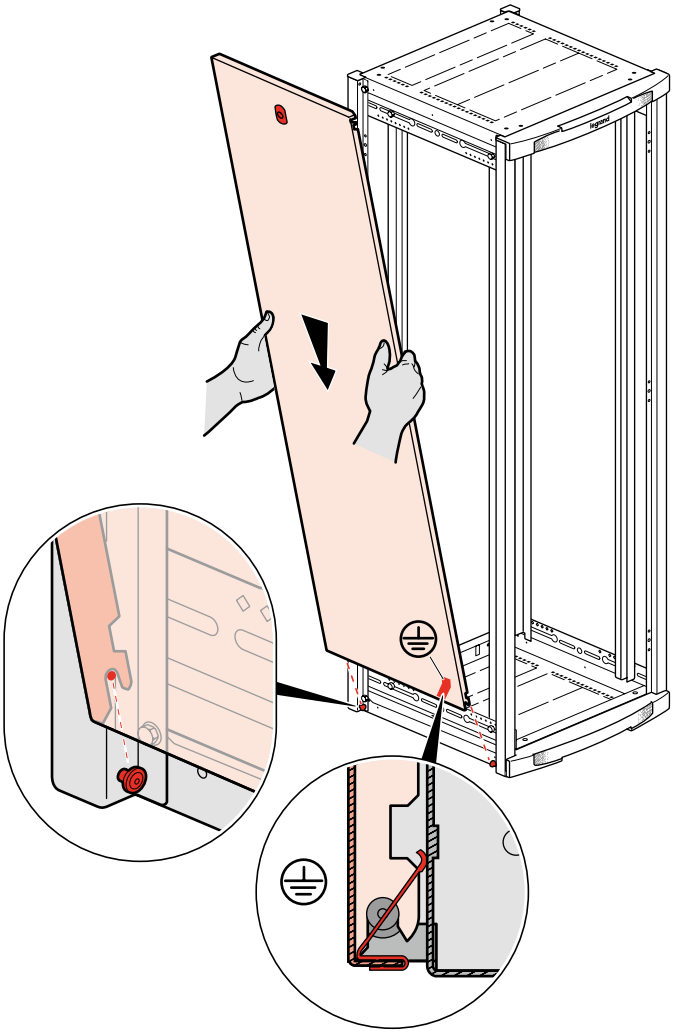

The clip automatically provides continuity of the metal conductive parts between the panels and the rest of the cabinet (no risk of this being forgotten).

The lock is compatible with key barrels (other key codes) and inserts Cat. Nos. 0 368 13/16/17/18/19/20/22/23/24/25/26/27.

## 1. GENERAL FEATURES *(continued)*

**1.1 Presentation** *(continued)*

The four 19" uprights have dual marking of the Us and assistance with depth adjustment for easy installation.

The adjustment is continuous with markings at 12.5 mm intervals:

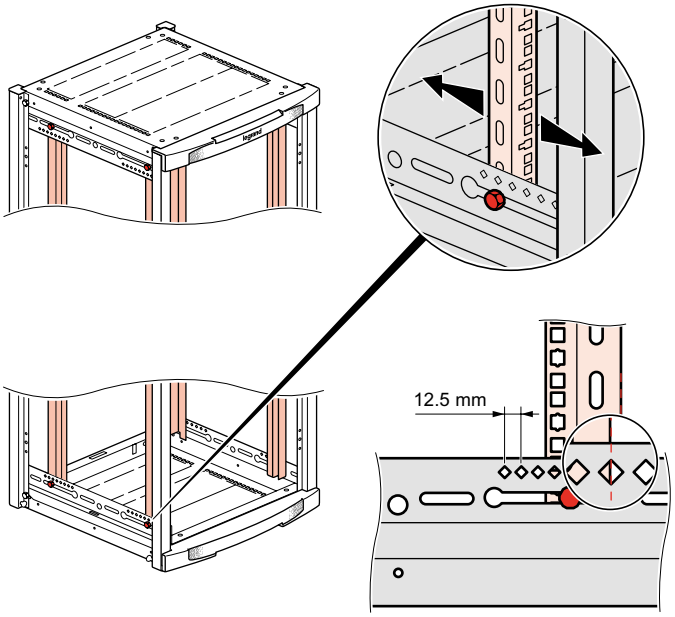


The dual marking of the Us enables location in relation to the top or the bottom of the cabinet:

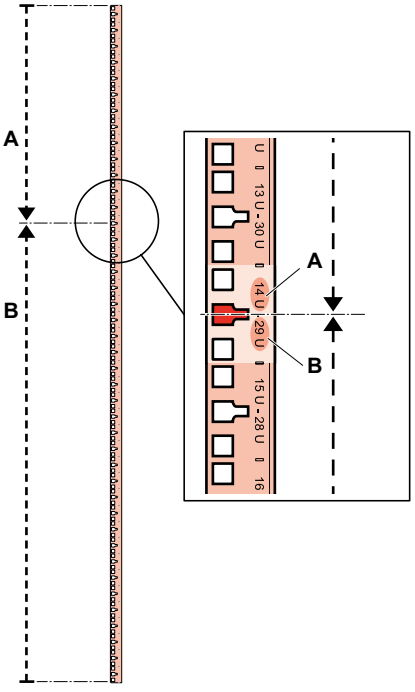


In the above example, the marking indicates that this is U no. 14 from the top and U no. 29 from the bottom of the cabinet.

The 19" uprights are perforated with 9.5 x 9.5 mm square holes.

# 19" LCS² freestanding cabinets

**Catalogue number(s): 0 463 00/06/12/18/19/21/22/23**
**0 463 28/29/30/33/34/35/41/42/43**

## 1. GENERAL FEATURES *(continued)*

### 1.2 Standards

19" LCS² freestanding cabinets comply with the following standards:

| | |
|---|---|
| IEC 60529<br>EN 60529 | (NF C 20-010) Degrees of protection provided by enclosures (IP code) |
| IEC 62262<br>EN 62262 | (NF EN 50102, NF C 20-015) Degrees of protection provided by enclosures for electrical equipment against external mechanical impacts (IK code) |
| IEC 60950-1<br>EN 60950-1<br>C 77-210-1 | Safety of information technology equipment |
| EIA-310-E | Cabinets, racks, panels and associated equipment (ANSI/EIA/310-E-2005) |
| IEC 60297-3-100<br>DIN 41414-7 | (NF C 20-150, NF C 20-151) Dimensions of mechanical structures of the 482.6 mm series (19 in) |

19" LCS² freestanding cabinets can be integrated in installations complying with the following standards:

| | |
|---|---|
| EN 50173-1 | Information technology - Generic cabling systems |
| EN 50174-1 & 2<br>C 90-480-1 & 2 | Information technology - Cabling installation |
| ISO IEC 11801 | Information technology - Generic cabling for customer premises |
| NF C 15-100<br>Part 4-41 | Low voltage electrical installations - recommendations |
| IEC 60364-4-41 | Low voltage electrical installations<br>- Protection for safety<br>- Protection against electric shock |

## 2. RANGE

### 2.1 Cabinet with single front door

| Catalogue Number | Capacity | Width (1) (mm) | Depth (1) (mm) |
|---|---|---|---|
| 0 463 00 | 24U | 600 | 600 |
| 0 463 06 | 29U | 600 | 600 |
| 0 463 12 | 33U | 600 | 600 |
| 0 463 18 | 42U | 600 | 600 |
| 0 463 19 | 42U | 600 | 800 |
| 0 463 21 | 42U | 800 | 600 |
| 0 463 22 | 42U | 800 | 800 |
| 0 463 23 | 42U | 800 | 1 000 |
| 0 463 28 | 47U | 800 | 800 |
| 0 463 29 | 47U | 800 | 1 000 |

Two extension freestanding cabinets complete the range. These are supplied without side panels and with a baying kit:

19" LCS² extension cabinets

| Catalogue Number | Capacity | Width (1) (mm) | Depth (1) (mm) |
|---|---|---|---|
| 0 463 30 | 42U | 600 | 600 |
| 0 463 33 | 42U | 800 | 800 |

### 2.2 Cabinet with double front door

Door opening suitable for small spaces

| Catalogue Number | Capacity | Width (1) (mm) | Depth (1) (mm) |
|---|---|---|---|
| 0 463 41 | 42U | 800 | 600 |
| 0 463 42 | 42U | 800 | 800 |
| 0 463 43 | 42U | 800 | 1 000 |

To meet specific requirements, the made-to-measure department offers 40 sizes and various configurations: front and rear door (microperforations, metal double door…), mounting of equipment, other colours, etc.

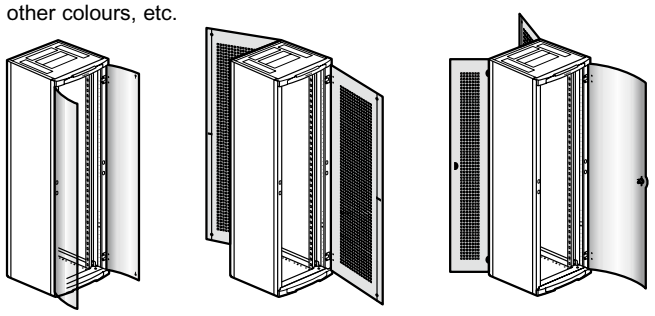

(1) Designated dimensions. See section 4.1 for overall dimensions.

## 3. TECHNICAL FEATURES

### 3.1 Index of protection

- IP20 in accordance with IEC EN 60529
  Protected against solid objects whose diameter is larger than 12.5 mm
- IK08 in accordance with IEC EN 62262
  Protected against mechanical impact with an energy of 5 joules

### 3.2 Mechanical performance

- Permissible load: 420 kg
- Resistance to shock acceleration and vibration in accordance with IEC 61587-1: level DL4

### 3.3 Design

- Structural uprights and upper end plate 1.5 mm thick galvanised steel + paint finish
- Lower end plate 1.5 mm thick Z140 MB-C galvanised steel
- Curved front door made of 5 mm thick colourless transparent safety glass.
  Charcoal grey RAL 7016 internal screen-printing on the vertical edges: 2 x 143 mm in 600 mm width, 2 x 243 mm in 800 mm width.
- Single door handle charcoal grey RAL 7016 polyamide
- Door hinges zamak + paint finish
- Fascia trims charcoal grey RAL 7016 ABS.
  Legrand marked in relief + pad printed in aluminium grey RAL 9006.
- Panels 1.2 mm thick sheet steel + paint finish
- Single door and panels bolt charcoal grey RAL 7016 polyamide
- 19" uprights 1.5 mm thick galvanised steel.
  Number of U marked using black inkjet marking.
- Levelling feet zinc-plated steel with black polypropylene fixed base

### 3.4 Corrosion resistance

- Corrosion class of the environment:
  C2 according to EN ISO 12944-2,
  3K3 according to IEC EN 60721-3-3
- Salt spray test according to ISO 9227 (NSS test) and IEC EN 60068-2-11 (test Ka) for 168 hours:
  degree of rusting Ri1 according to ISO 4628-3,
  propagation $\leqslant$ 1 mm according to ISO 4628-8
- Sulphur dioxide ($SO_2$) test according to EN ISO 6988 for 48 hours:
  degree of rusting Ri1 according to ISO 4628-3,
  ISO 10289 annex A class 8 type image

### 3.5 Properties of the paint coating

- Thermosetting polyester paint applied by electrostatic dusting
- Charcoal grey RAL 7016
- Textured satin appearance
- 60 to 80 $\mu$m thick
- Excellent impact and scratch resistance
- Excellent resistance to cleaning agents (excluding strong chlorinated, fluorinated and ketone solvents).
  Some products may change the appearance. It is therefore advisable to carry out a test first.
- Light exposure test (xenon-arc lamp) according to ISO 4892-2 method B for 500 hours: no visible fading

## 3. TECHNICAL FEATURES *(continued)*

### 3.6 Electrical continuity of the conductive parts

Continuity of the metal conductive parts of the cabinet is achieved by construction. For the panels, a stainless steel clip automatically provides the equipotential link by pressing against the lower end plate with galvanised steel finish.

### 3.7 Weight

Net weight excluding packaging.

| Cabinet catalogue number | Weight (kg) |
|---|---|
| 0 463 00 | 69 |
| 0 463 06 | 77 |
| 0 463 12 | 84 |
| 0 463 18 (extension 0 463 30) | 99 (72) |
| 0 463 19 | 110 |
| 0 463 21/41 | 114 |
| 0 463 22/42 (extension 0 463 33) | 127 (90) |
| 0 463 23/43 | 151 |
| 0 463 28 | 138 |
| 0 463 29 | 163 |

**Note:** 19" LCS² cabinets are delivered on a 125 mm high pallet.

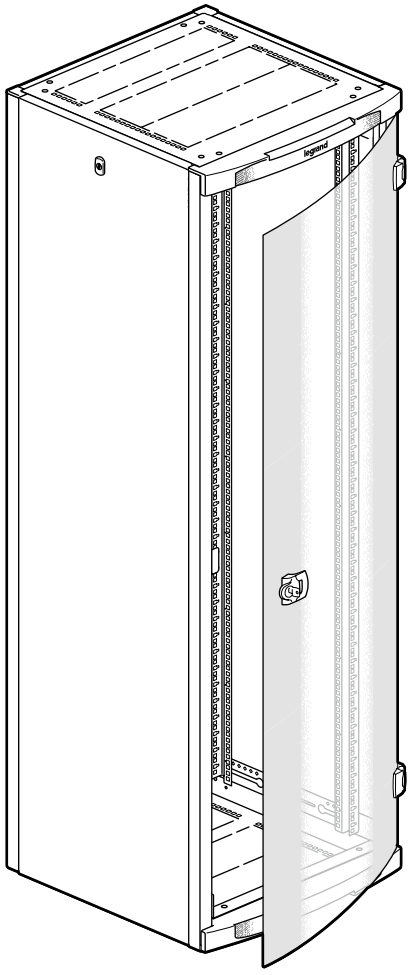

## 4. DIMENSIONS

All dimensions are in mm.

### 4.1 Dimensions

Model shown: 600 x 600 mm cabinet / 800 x 800 mm double door cabinet

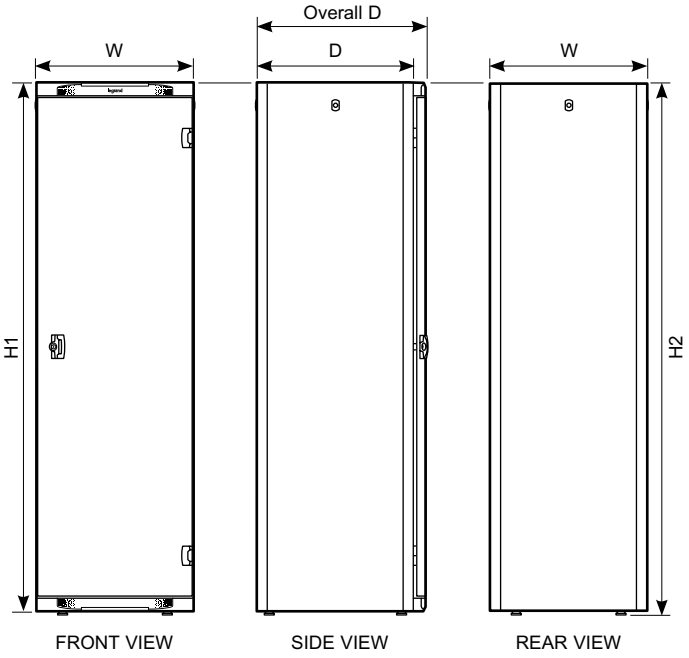


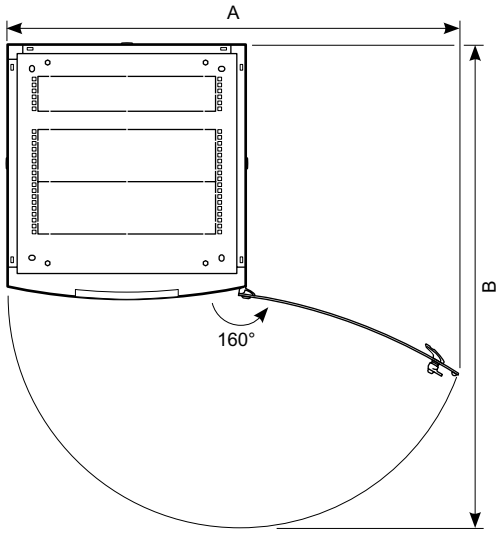


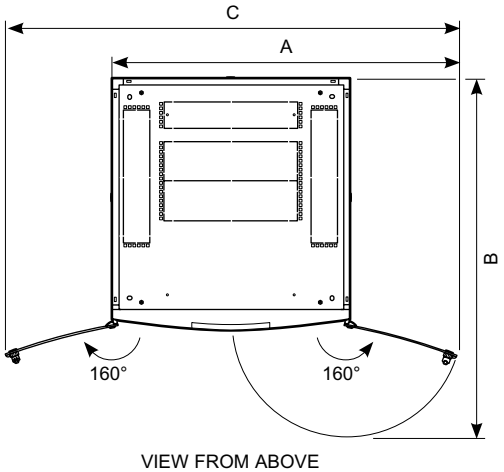


## 4. DIMENSIONS *(suite)*

### 4.1 Dimensions *(suite)*

**Single front door cabinets**

| Cat. No. | Capacity | W | D | Overall dimensions | | | | | |
|---|---|---|---|---|---|---|---|---|---|
| | | | | H1 (1) | H2 min./max. (2) | W | D | A | B |
| 0 463 00 | 24U | 600 | 600 | 1226 | 1241/1271 | 610 | 659 | 1138 | 1208 |
| 0 463 06 | 29U | 600 | 600 | 1448 | 1463/1493 | 610 | 659 | 1138 | 1208 |
| 0 463 12 | 33U | 600 | 600 | 1626 | 1641/1671 | 610 | 659 | 1138 | 1208 |
| 0 463 18 | 42U | 600 | 600 | 2026 | 2041/2071 | 610 | 659 | 1138 | 1208 |
| 0 463 19 | 42U | 600 | 800 | 2026 | 2041/2071 | 610 | 859 | 1138 | 1408 |
| 0 463 21 | 42U | 800 | 600 | 2026 | 2041/2071 | 810 | 657 | 1525 | 1408 |
| 0 463 22 | 42U | 800 | 800 | 2026 | 2041/2071 | 810 | 857 | 1525 | 1608 |
| 0 463 23 | 42U | 800 | 1000 | 2026 | 2041/2071 | 810 | 1057 | 1525 | 1808 |
| 0 463 28 | 47U | 800 | 800 | 2248 | 2263/2293 | 810 | 857 | 1525 | 1608 |
| 0 463 29 | 47U | 800 | 1000 | 2248 | 2263/2293 | 810 | 1057 | 1525 | 1808 |
| Extension cabinets | | | | | | | | | |
| 0 463 30 | 42U | 600 | 600 | 2026 | 2041/2071 | 600 | 659 | 1138 | 1208 |
| 0 463 33 | 42U | 800 | 800 | 2026 | 2041/2071 | 800 | 857 | 1525 | 1608 |

**Double front door cabinets**

| Cat. No. | Capacity | W | D | Overall dimensions | | | | | | |
|---|---|---|---|---|---|---|---|---|---|---|
| | | | | H1 (1) | H2 min / max (2) | W | D | A | B | C |
| 0 463 41 | 42U | 800 | 600 | 2026 | 2041 / 2071 | 810 | 657 | 1165 | 815 | 1535 |
| 0 463 42 | 42U | 800 | 800 | 2026 | 2041 / 2071 | 810 | 857 | 1165 | 1015 | 1535 |
| 0 463 43 | 42U | 800 | 1000 | 2026 | 2041 / 2071 | 810 | 1057 | 1165 | 1215 | 1535 |

(1) Without level adjustment feet
(2) With level adjustment feet (+15 to 45 mm)

## 4. DIMENSIONS *(continued)*

### 4.2 Usable dimensions

4.2.1 600 mm wide freestanding cabinets

600 mm wide cabinets are available in 4 heights:
24U, 29U, 33U and 42U

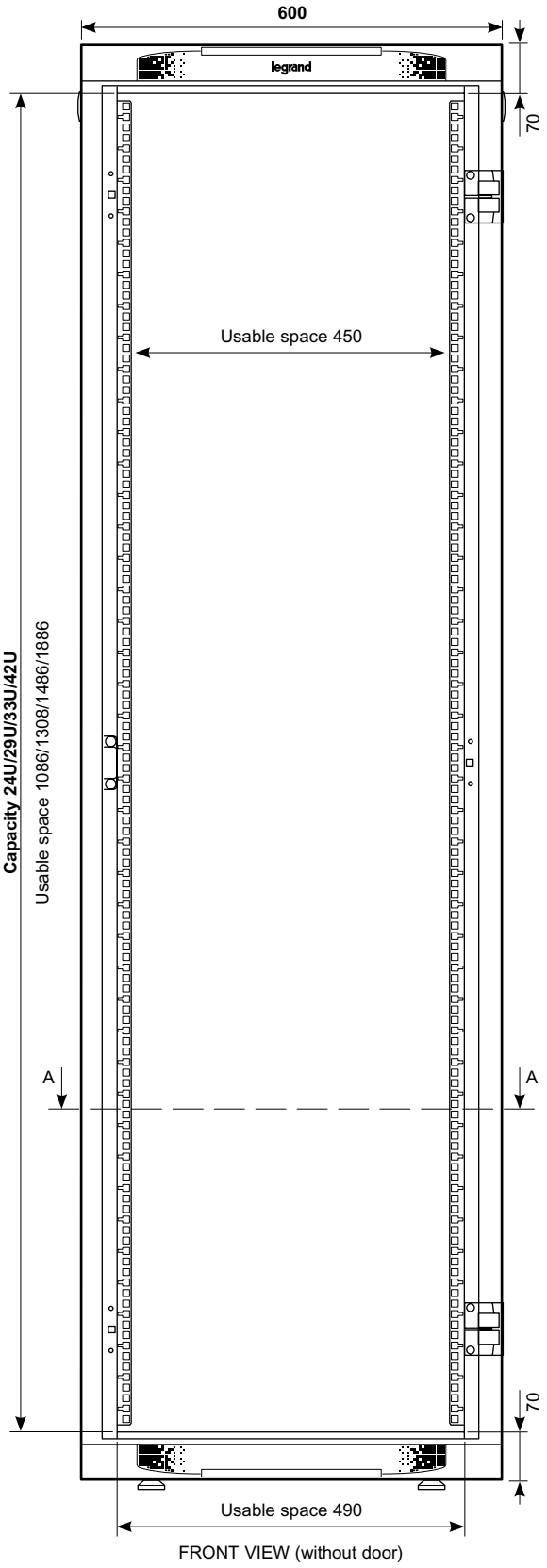


FRONT VIEW (without door)

## 4. DIMENSIONS *(continued)*

### 4.2 Usable dimensions *(continued)*

4.2.1 600 mm wide freestanding cabinets *(continued)*

600 mm wide cabinets are available in 2 depths: 600 and 800 mm
Model shown: 600 x 600 mm cabinet

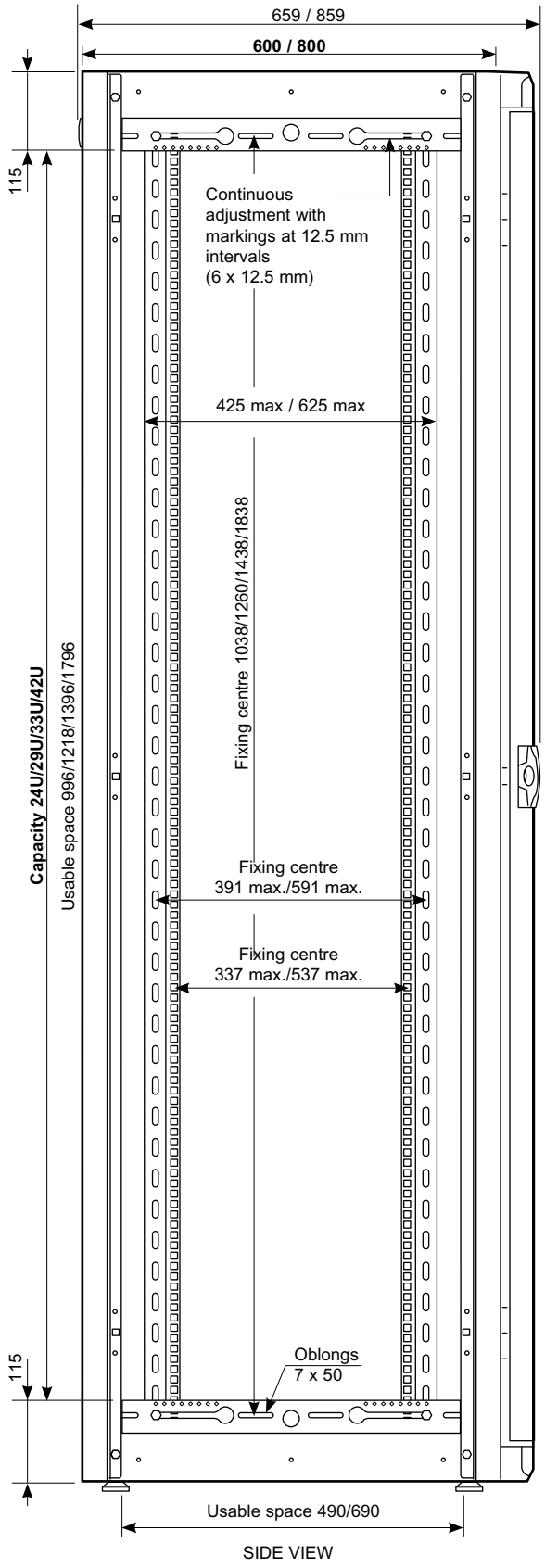


SIDE VIEW

## 4. DIMENSIONS *(continued)*

### 4.2 Usable dimensions *(continued)*

4.2.1 600 mm wide freestanding cabinets *(continued)*

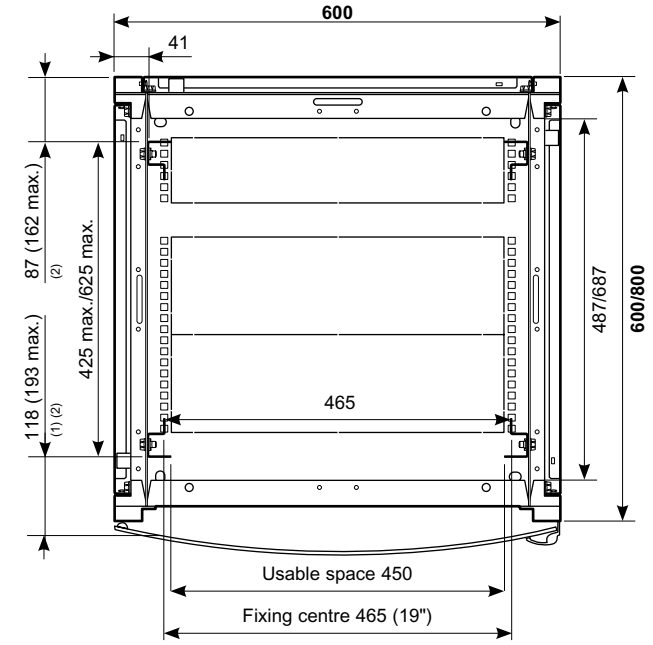


A-A CROSS-SECTION VIEW(3) (with door)

(1) Dimension below door at 19" uprights
(2) Continuous adjustment with markings at 12.5 mm intervals
(3) See front view on page 6

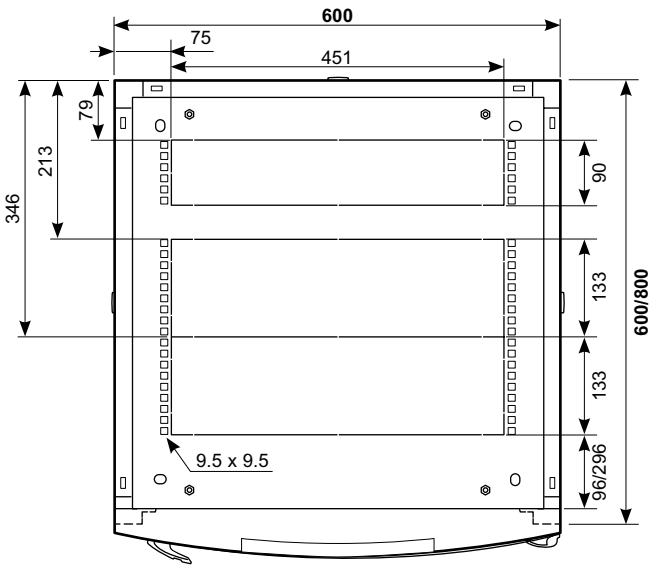


VIEW FROM ABOVE

**Note:** The dimensions of the upper and lower end plates are identical.

## 4. DIMENSIONS *(continued)*

### 4.2 Usable dimensions *(continued)*

4.2.2 800 mm wide freestanding cabinets

800 mm wide cabinets are available in 2 heights:
42U and 47U

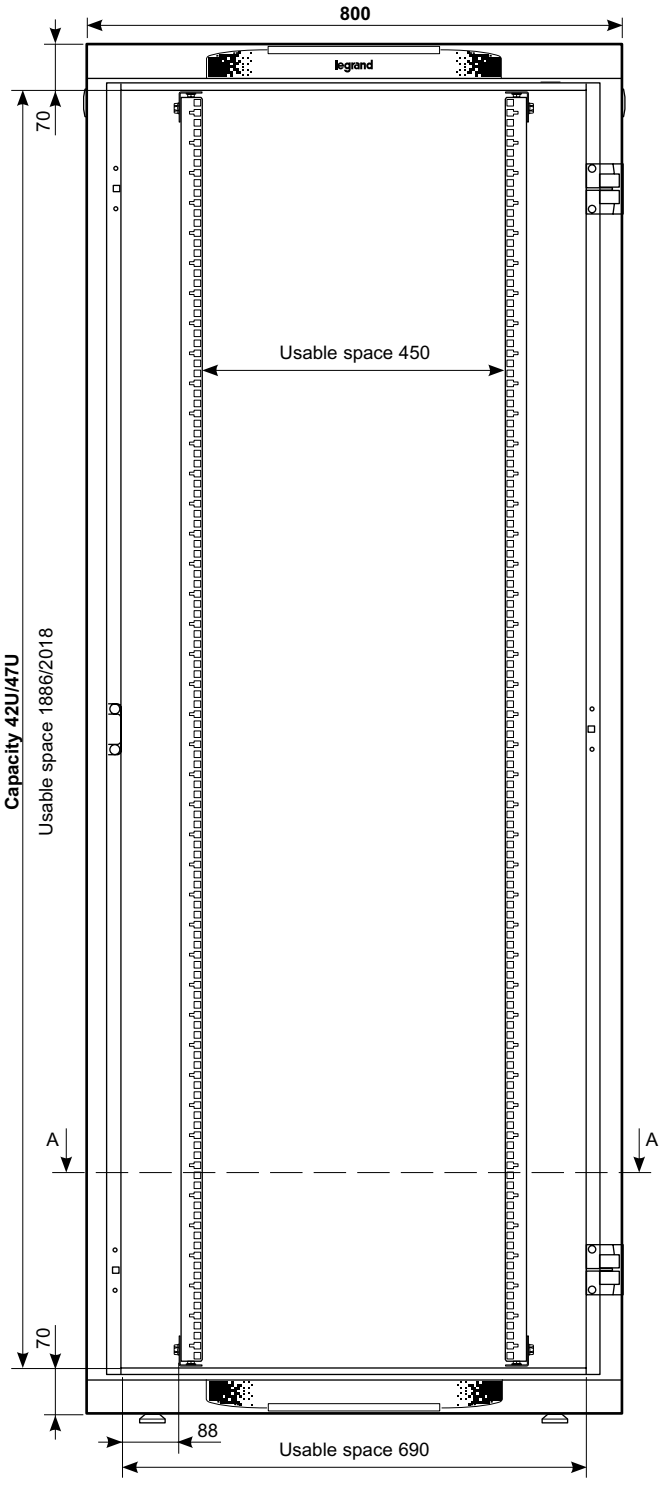


FRONT VIEW (without door)

## 4. DIMENSIONS *(continued)*

### 4.2 Usable dimensions *(continued)*

4.2.2 800 mm wide freestanding cabinets *(continued)*

800 mm wide cabinets are available in 3 depths: 600, 800 and 1000 mm

Model shown: 800 x 800 mm single door cabinet

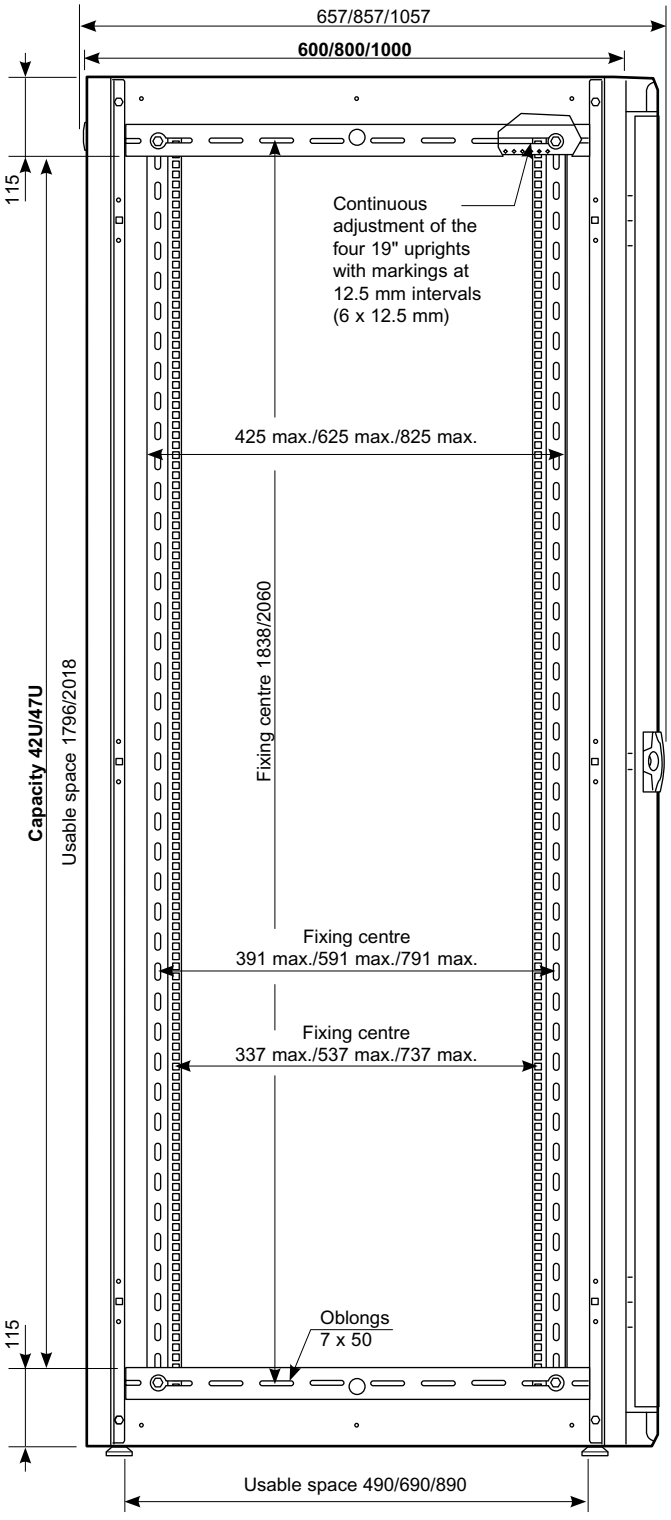


SIDE VIEW

## 4. DIMENSIONS *(continued)*

### 4.2 Usable dimensions *(continued)*

4.2.2 800 mm wide freestanding cabinets *(continued)*

Model shown: 800 x 800 mm single door cabinet

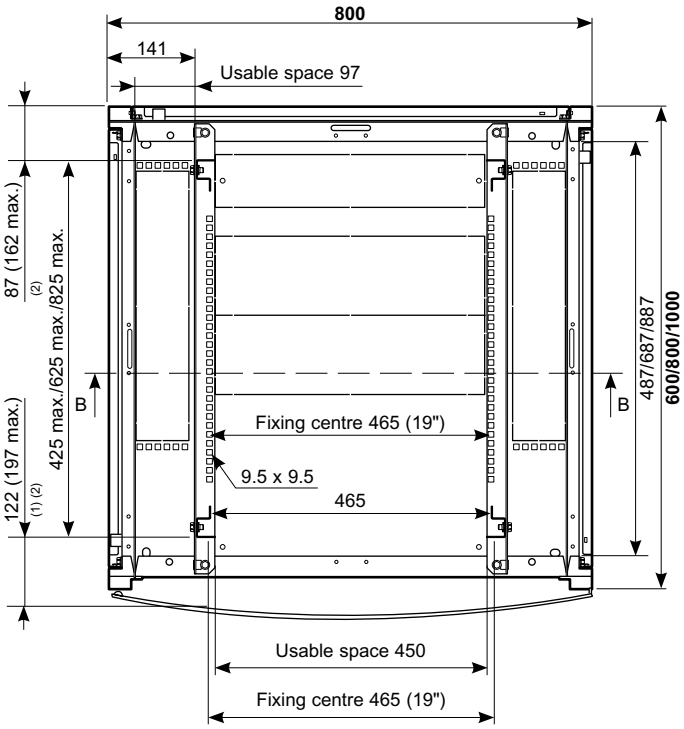


A-A CROSS-SECTION VIEW (3) (with door)

(1) Dimension below door at 19" uprights
(2) Continuous adjustment with markings at 12.5 mm intervals
(3) See front view page 7

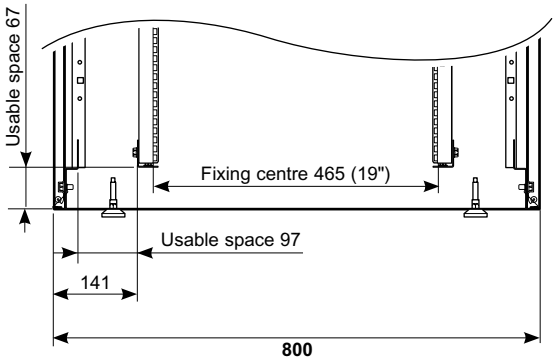


B-B CROSS-SECTION

800 mm wide 19" LCS² cabinets enable 19" equipment to be fixed horizontally in the upper and lower parts.

## 4. DIMENSIONS *(continued)*

### 4.2 Usable dimensions *(continued)*

4.2.2 800 mm wide freestanding cabinets *(continued)*

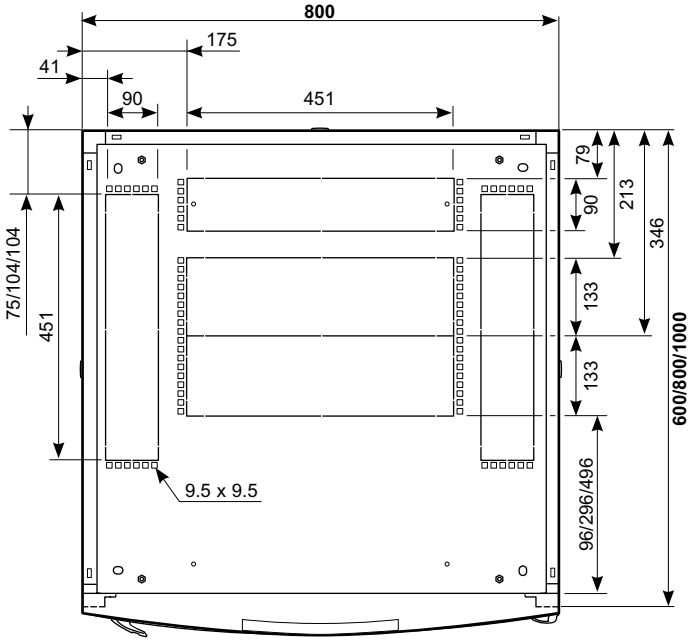


VIEW FROM ABOVE

**Note:** The dimensions of the upper and lower end plates are identical.

4.2.3 19" uprights

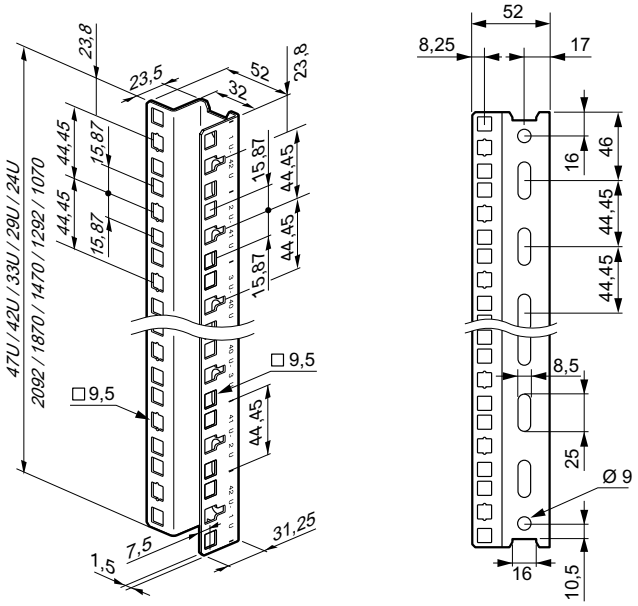


## 4. DIMENSIONS *(continued)*

### 4.3 Positioning of supports on the floor

The cabinets are equipped with 4 levelling feet.
Accessories can be used to modify the link with the floor (see sections 10.1 to 10.3).

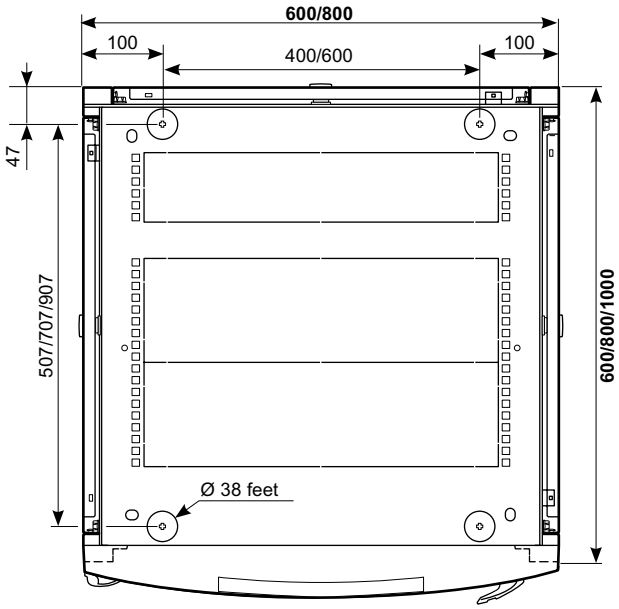


VIEW FROM BELOW

## 5. BAYING

### 5.1 Direct baying

19" LCS² freestanding cabinets can be joined laterally together using a baying kit:

| Cat. No. | For cabinets depth (mm) |
|---|---|
| 0 463 37 | 600 |
| 0 463 38 | 800 |
| 0 463 39 | 1000 |

**Note:** The LCS² range includes extension cabinets (single door) for the 42U x 600 x 600 and 42U x 800 x 800 sizes. These special cabinets are supplied with the baying kit and without side panels.

A baying kit comprises:
- 2 galvanised steel lugs
- 2 steel crosspieces + paint finish (same as cabinets)
- Fixing screws

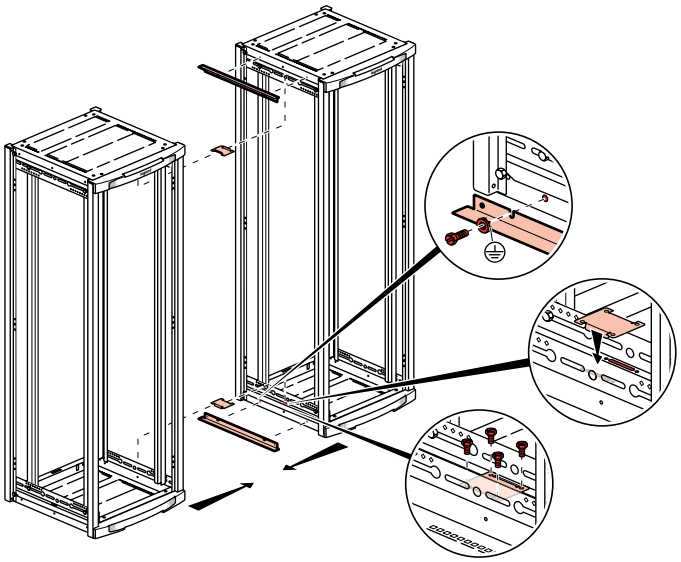

The crosspieces provide protection against dust and maintain the IP20 protection of the cabinets.

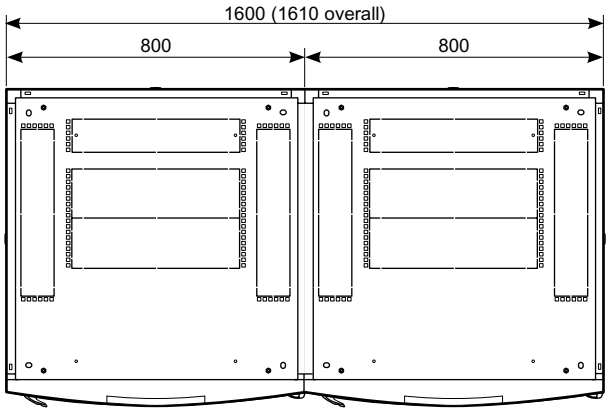


VIEW OF A COMBINATION FROM ABOVE

## 5. BAYING *(continued)*

### 5.2 Baying via cabling unit

5.2.1 Presentation

The LCS² cabling unit is used to join laterally two 42U 19" LCS² freestanding cabinets together, and provides easier management of cables and patch cords.

Joined to 2 x 600 mm wide cabinets, the cabling unit is an alternative solution to an assembly of 2 x 800 mm wide cabinets and has smaller dimensions.

The cabling unit is available in 2 depths:

| Cat. No. | For 42U cabinets depth (mm) |
|---|---|
| 0 463 34 | 600 |
| 0 463 35 | 800 |

**Note:** The LCS² range includes extension cabinets (single door) for the 42U x 600 x 600 and 42U x 800 x 800 sizes. These special cabinets are supplied without side panels.

A cabling unit principally comprises:
- 2 identical end plates
- 2 identical doors

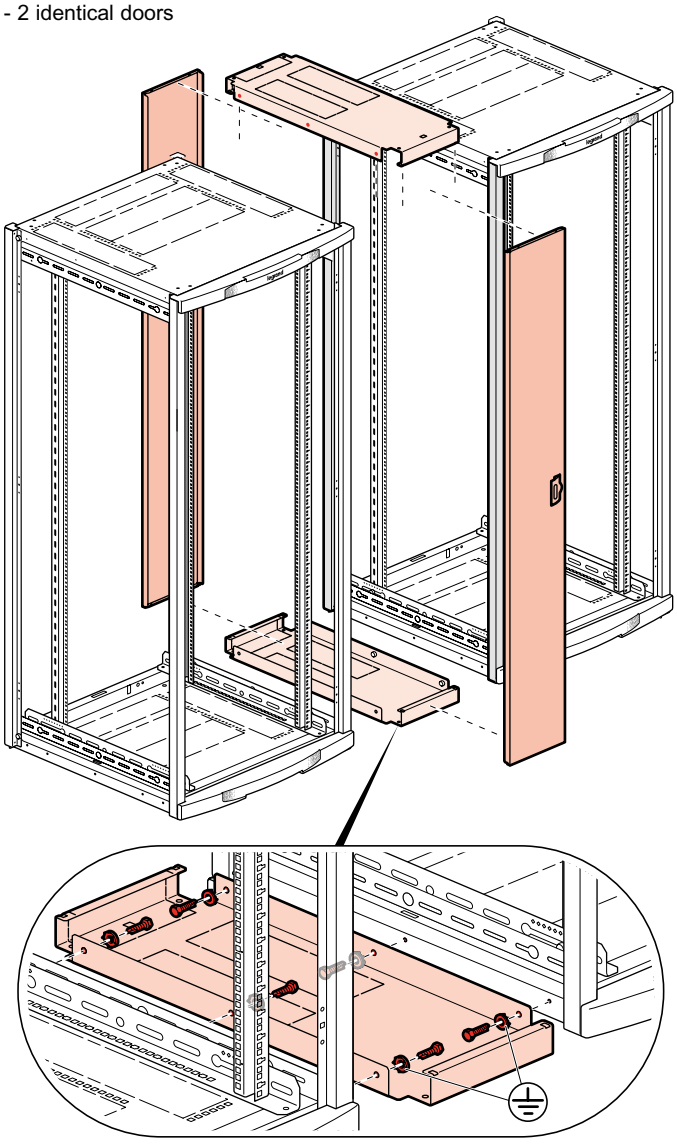

The cabling unit can only be installed between 2 cabinets. It cannot be mounted at the end.

## 5. BAYING *(continued)*

### 5.2 Baying via cabling unit *(continued)*

5.2.1 Presentation *(continued)*

Each door is reversible and easy to remove.

The end plates have cut-outs for cable entries.

The installation of a side cable tray optimises cable management (see section 7.2).

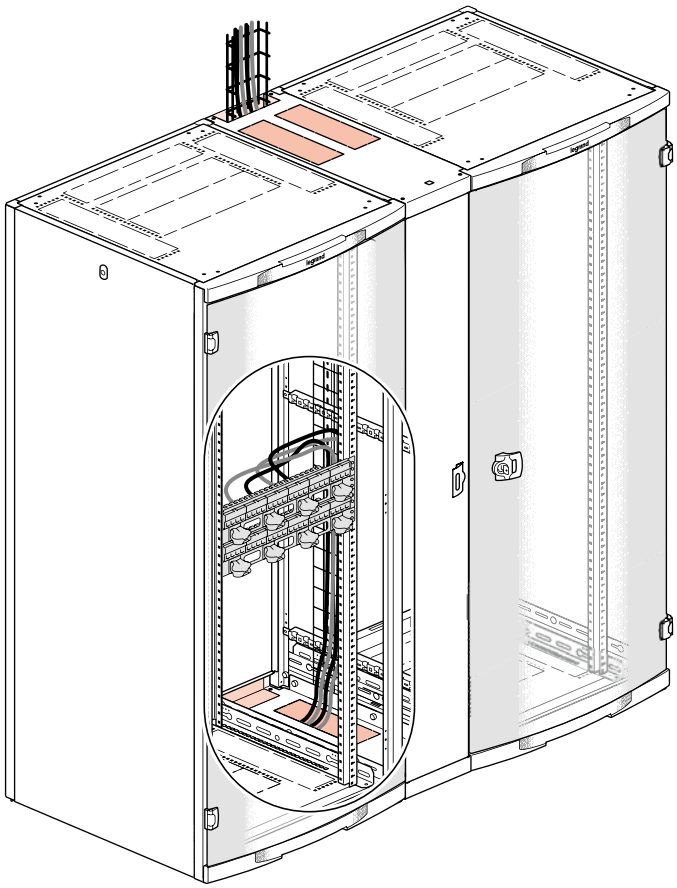

The cabling units are the same colour as 19" LCS² cabinets, enabling attractive assemblies to be created.

5.2.2 Features

- IK08
- IP20 maintained when joined
- Doors with handle equipped with a 2433A key lock (same as single door cabinets)
- End plates 1.5 mm thick galvanised steel + paint finish (same as cabinets)
- Doors 1.2 mm thick sheet steel + paint finish (same as cabinets)
- Supplied with earthing kit and complete set of screws
- Feet zinc-plated steel with black polypropylene fixed base

## 5. BAYING *(continued)*

### 5.2 Baying via cabling unit *(continued)*

5.2.2 Features *(continued)*

Combination shown with two 600 x 600 mm cabinets.

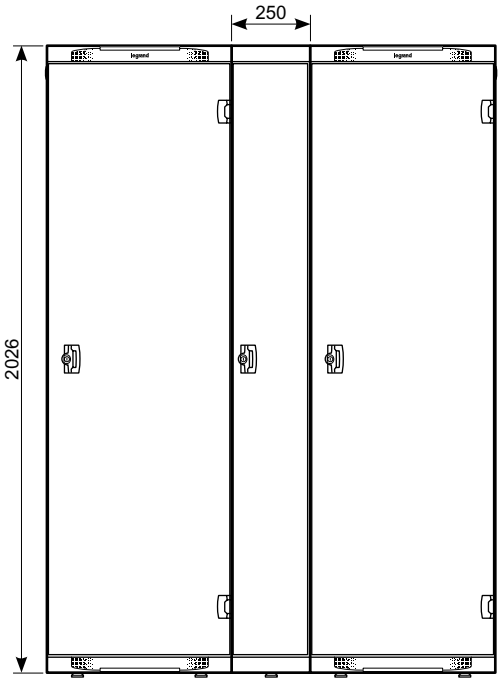


FRONT VIEW

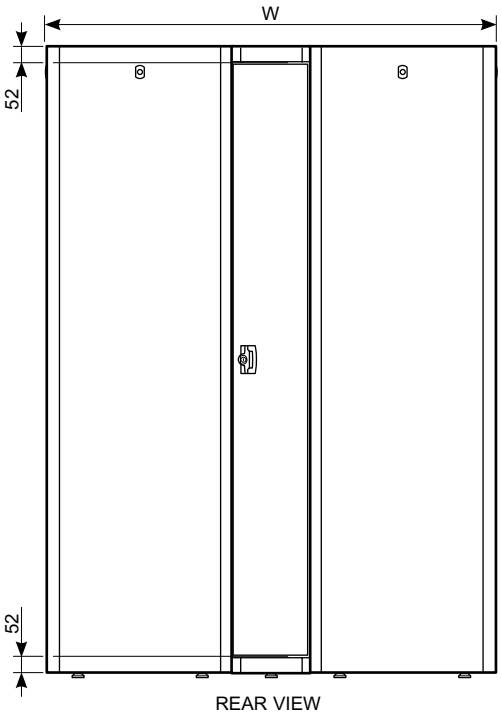


REAR VIEW

| Type of baying | W | Overall W |
|---|---|---|
| With 2 cab. width 600 | 1450 | 1460 |
| With 1 cab. width 600 & 1 cab. width 800 | 1650 | 1660 |
| With 2 cab. width 800 | 1850 | 1860 |

## 5. BAYING *(continued)*

### 5.2 Baying via cabling unit *(continued)*

5.2.2 Features *(continued)*

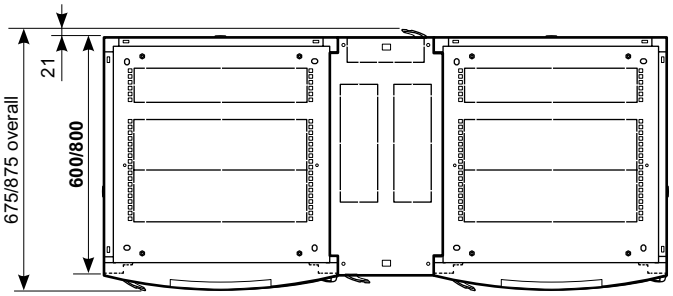


VIEW FROM ABOVE

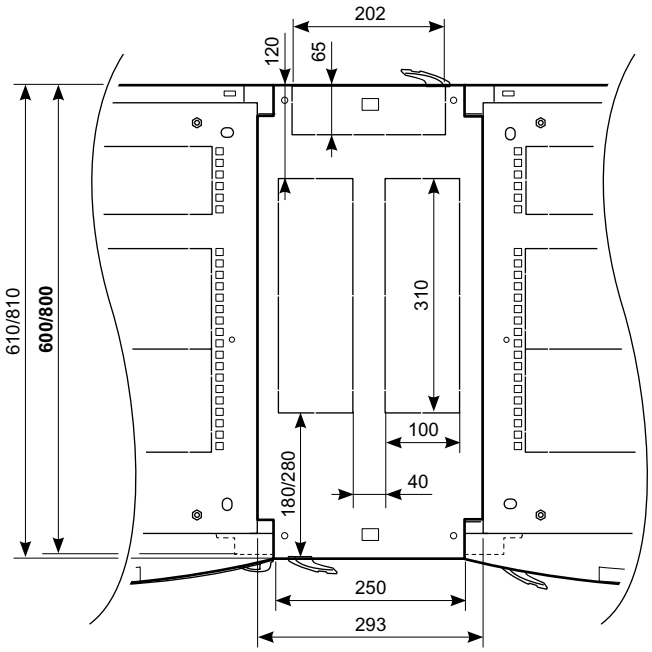


DETAILED VIEW FROM ABOVE

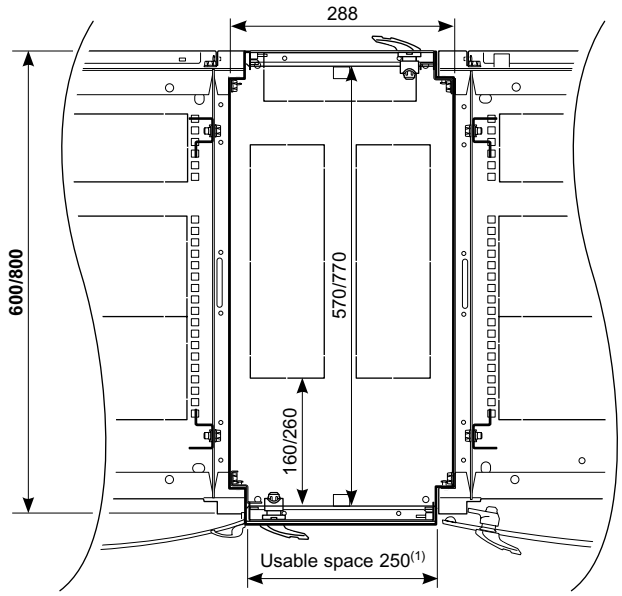


(1) Usable height: 1922 mm

INTERNAL CROSS-SECTION VIEW

## 6. PLINTHS

### 6.1 Freestanding cabinet plinths

6.1.1 Presentation

19" LCS² cabinets can be equipped with a 100 or 200 mm high metal plinth.

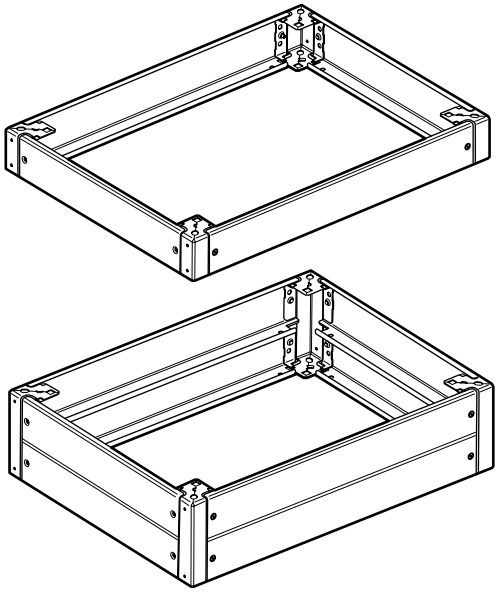

LCS² plinths comprise 4 one-piece corner blocks and 4 traps, height 100 mm, providing total accessibility on all 4 sides.

The plinths are the same colour as the cabinets so that they match perfectly (charcoal grey RAL 7016).

A plinth is fixed directly to the end plate of the cabinet:

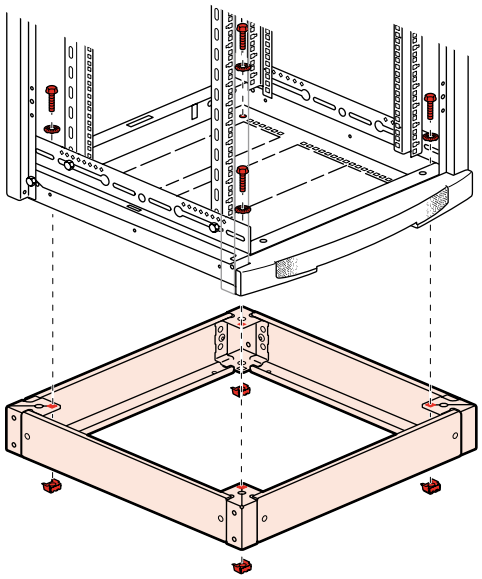

Note: It is also possible to place 2 x 100 mm high plinths one on top of the other.

## 6. PLINTHS *(continued)*

### 6.1 Freestanding cabinet plinths *(continued)*

6.1.1 Presentation *(continued)*

The following is required to create a plinth:
- The correct plinth kit for the width of the cabinet (corner blocks + solid front and rear traps)
- The correct set of 2 solid side traps for the depth of the cabinet (2 sets for a 200 mm high plinth)

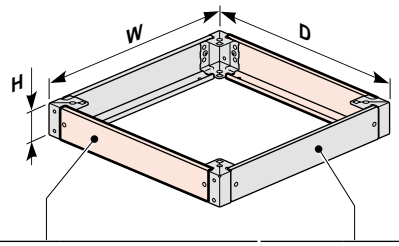


| Set of 2 solid side traps (mm) | | |
|---|---|---|
| **H** = 100 | **D** = 600 | Cat. No. 0 464 54 |
| | **D** = 800 | Cat. No. 0 464 56 |
| | **D** = 1000 | Cat. No. 0 464 58 |
| **H** = 200 | **D** = 600 | 2 x Cat. No. 0 464 54 |
| | **D** = 800 | 2 x Cat. No. 0 464 56 |
| | **D** = 1000 | 2 x Cat. No. 0 464 58 |

| Plinth kit (mm) | | |
|---|---|---|
| **H** = 100 | **W** = 600 | Cat. No. 0 464 50 |
| | **W** = 800 | Cat. No. 0 464 51 |
| **H** = 200 | **W** = 600 | Cat. No. 0 464 52 |
| | **W** = 800 | Cat. No. 0 464 53 |

The solid traps can be replaced by:
- Either a ventilated trap for natural ventilation
- Or a trap with brushes for cable entry on one side of the plinth

These special traps, also 100 mm high, are supplied singly.

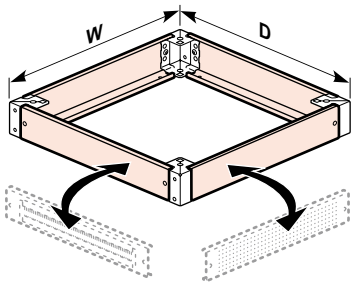


| | Ventilated trap | Trap with brushes |
|---|---|---|
| | 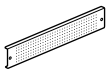 | 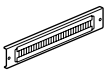 |
| **W/D** = 600 | Cat. No. 0 464 60 | Cat. No. 0 464 62 |
| **W/D** = 800 | Cat. No. 0 464 61 | Cat. No. 0 464 63 |

## 6. PLINTHS *(continued)*

### 6.1 Freestanding cabinet plinths *(continued)*

6.1.1 Presentation *(continued)*

If cabinets are joined together directly, their plinths can be joined together mechanically (screws not supplied).

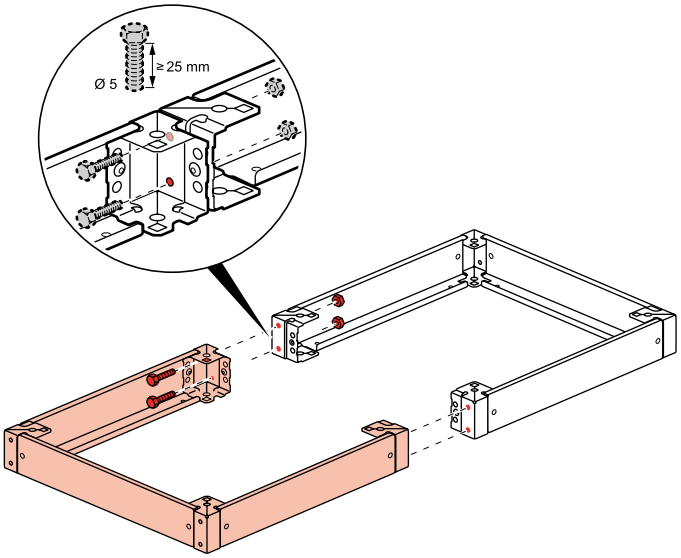


The plinths can be equipped with cross bars. Fixed between 2 corner blocks, they can be used for clamping cables and, in a 200 mm high plinth, for fixing a U-shaped cable tray.

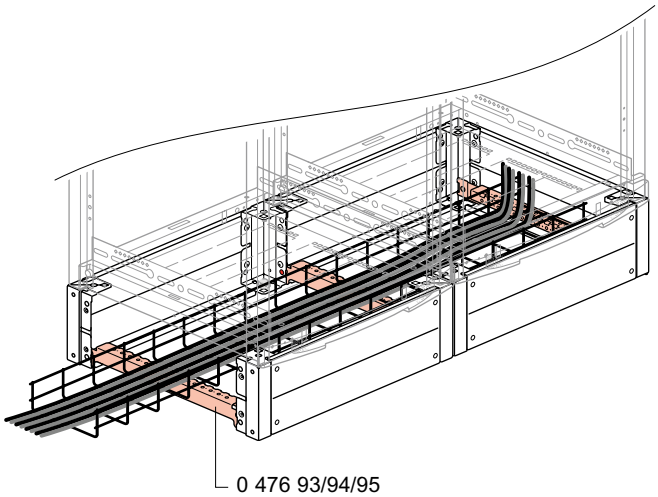


| Cross bars | |
|---|---|
| Cat. No. | For depth (mm) |
| 0 476 93 | 600 |
| 0 476 94 | 800 |
| 0 476 95 | 1000 |

| U-shaped cable trays | |
|---|---|
| Cat. No. | Internal width x height (mm) |
| 0 464 69 | 200 x 54 |
| 0 464 70 | 400 x 54 |

## 6. PLINTHS *(continued)*

### 6.1 Freestanding cabinet plinths *(continued)*

6.1.2 Features

6.1.2.1 Cabinet plinths (plinth kit + side traps)

- Plinth fixed using M12 screws
- Traps fixed using black zinc-plated M6 screws
- Corner blocks 2 mm thick steel + paint finish (same as cabinets)
- Traps 1.5 mm thick steel + paint finish (same as cabinets) with double fold reinforcement on floor side
- Supplied with complete set of screws for the equipotential link with the cabinet
- Can be fixed to the floor (screws not supplied)

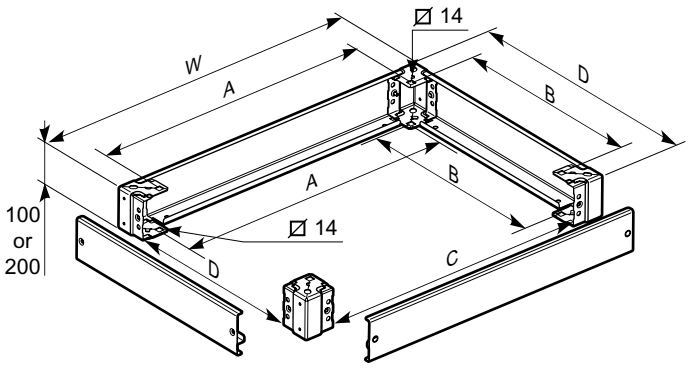


| | Dimensions (mm) | | | | | |
|---|---|---|---|---|---|---|
| | Overall | | Fixings | | Usable area | |
| W x D | W | D | A | B | C | D |
| 600 x 600 | 599 | 599 | 478 | 478 | 449 | 449 |
| 600 x 800 | 599 | 799 | 478 | 678 | 449 | 649 |
| 800 x 600 | 799 | 599 | 678 | 478 | 649 | 449 |
| 800 x 800 | 799 | 799 | 678 | 678 | 649 | 649 |
| 800 x 1000 | 799 | 999 | 678 | 878 | 649 | 849 |

6.1.2.2 Ventilated traps/with brushes

- Height 100 mm
- Steel thick 1.5 mm + paint finish (same as cabinets) with double fold reinforcement on floor side
- Supplied with black zinc-plated M6 fixing screws

The ventilated traps have Ø 5 mm perforations:

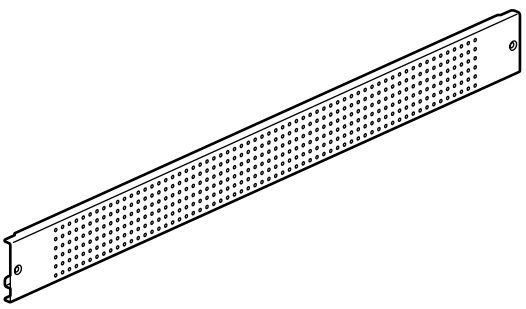

The traps with brushes are supplied with a black stiff brush and a black flexible brush (polyamide fibres).

The usable feedthrough area of the cable entry with brushes is:
- 424 x 45 mm for width/depth 600 mm
- 624 x 45 mm for width/depth 800 mm

## 6. PLINTHS *(continued)*

### 6.1 Freestanding cabinet plinths *(continued)*

6.1.2 Features *(continued)*

6.1.2.3 Cross bars

- 2 mm thick galvanised steel
- Supplied singly with fixing screws

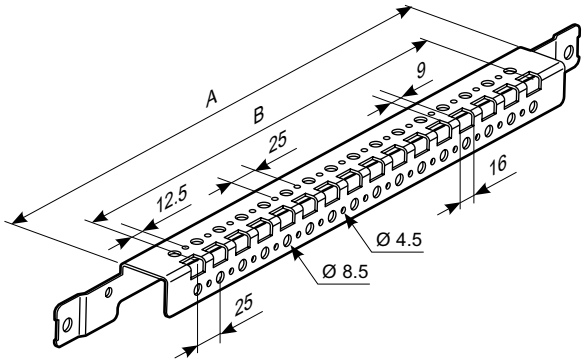


| Cat. No. | A | B |
|---|---|---|
| 0 476 93 | 444 | 375 |
| 0 476 94 | 644 | 575 |
| 0 476 95 | 844 | 775 |

6.1.2.4 U-shaped cable trays

- Length 3 m
- Frame 100 x 50 mm
- Zinc-plated steel
- Supplied with screws for fixing on the cross bars

| Cat. No. | Overall dimensions (mm) | Wire diameter (mm) |
|---|---|---|
| 0 464 69 | 218 x 64 | 4.4 |
| 0 464 70 | 424 x 64 | 3.9 and 5.9 |

## 6. PLINTHS *(continued)*

### 6.2 Plinth for cabling unit

When joining 19" LCS² freestanding cabinets via a cabling unit, Cat. No. 0 464 64 is used to link the plinths of the joined cabinets (at the front and/or rear).

Cat. No. 0 464 64 comprises a 100 mm high trap.
For a height of 200 mm, the number of traps must be doubled.

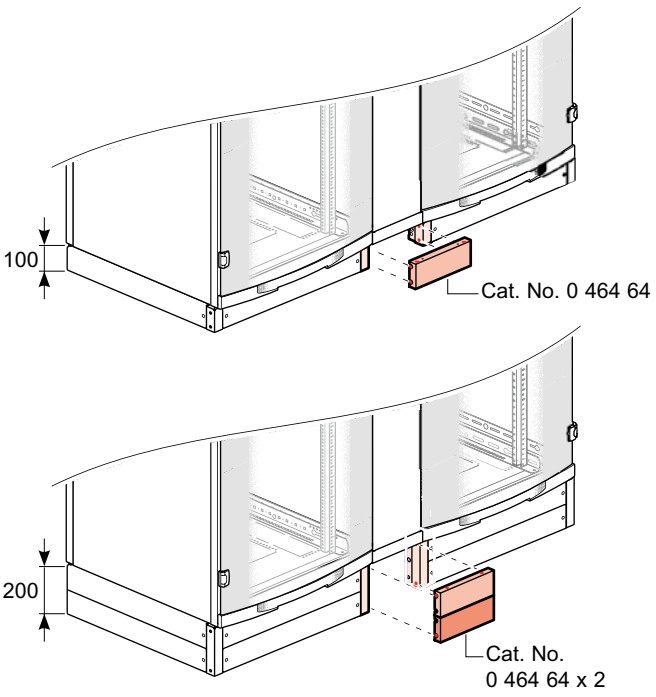


The trap is made of 1.5 mm thick steel with paint finish (same as cabinets) and supplied with its fixing screws.

### 6.3 Linking interface

6.3.1 Presentation

The linking interface Cat. No. 0 464 66 provides protection and a finish for the link between freestanding cabinets and cable ducts. It is positioned to the right or left of a 600 mm deep cabinet equipped with a 200 mm high plinth.

It is mechanically joined to the cabinet plinth.

The interface comprises:
- 3 corner blocks
- A front panel trap
- A cover

Its reversible cover with cut-outs allows for different cable entry configurations.

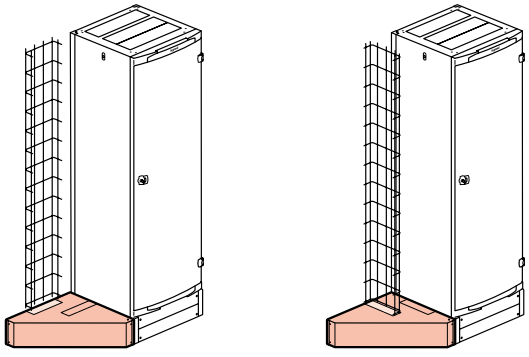

## 6. PLINTHS *(continued)*

### 6.3 Linking interface *(continued)*

6.3.1 Presentation *(continued)*

The linking interface helps to maintain the bending radius of the cables:

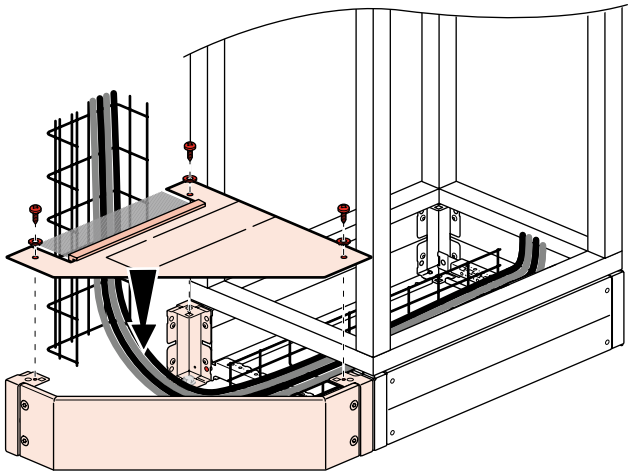

U-shaped cable tray, see section 6.1.

6.3.2 Features

- Corner blocks and cover 2 mm thick steel + paint finish (same as cabinets)
- Trap 1.5 mm thick steel + paint finish (same as cabinets)
- Supplied with black cable entry brushes (polyamide fibres) and complete set of screws (apart from those for fixing to the floor)

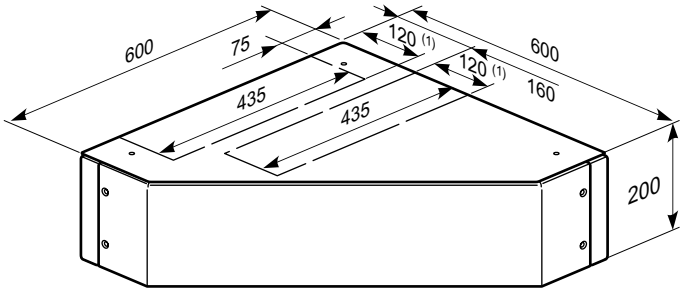


(1) Usable feedthrough area with brush: 110 x 435 mm

Fixing to the floor

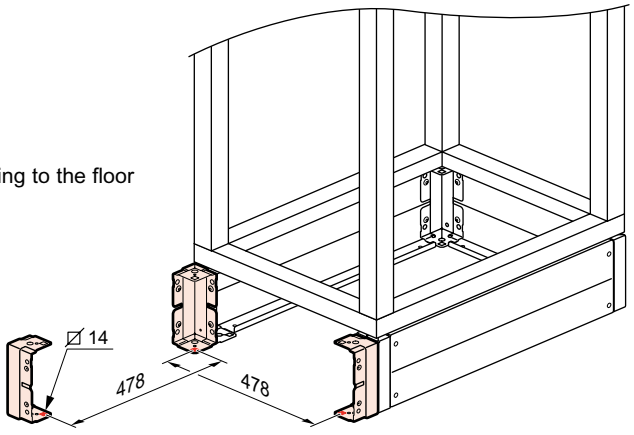

## 6. PLINTHS *(continued)*

### 6.4 Adjustable height plinths

6.4.1 Presentation

Adjustable height plinths are used in rooms equipped with a raised floor composed of tiles. The plinth transfers the load of the cabinet directly to the ground.

| Adjustable height plinth | |
|---|---|
| **Cat. No.** | **For cabinet width / depth (mm)** |
| 0 464 30 | 600 x 600 |
| 0 464 31 | 600 x 800 |
| 0 464 32 | 600 x 1000 |
| 0 464 34 | 800 x 600 |
| 0 464 35 | 800 x 800 |
| 0 464 36 | 800 x 1000 |

Each plinth is supplied with front and rear floor tile support brackets. Side tile support brackets must be order separately for the end of the cabinets:

| Set of 2 side tile support brackets | |
|---|---|
| **Cat. No.** | **For plinth depth (mm)** |
| 0 464 38 | 600 |
| 0 464 39 | 800 |
| 0 464 40 | 1000 |

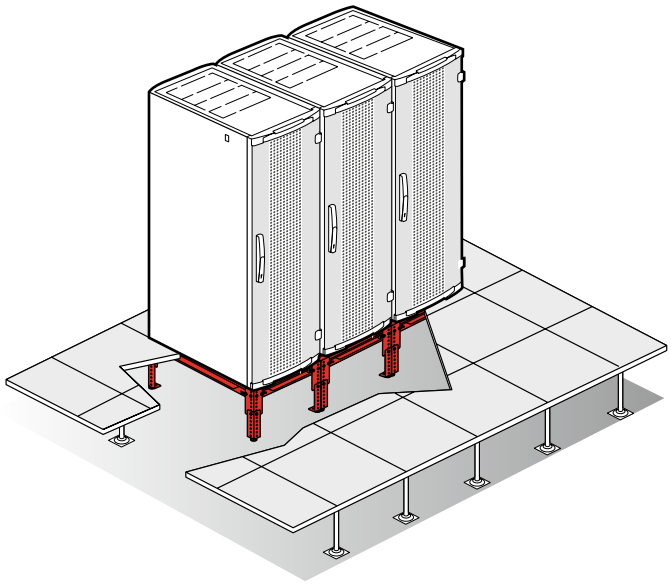

## 6. PLINTHS *(continued)*

### 6.4 Adjustable height plinths *(continued)*

6.4.2 Features

- For floor tiles 30 or 38 mm thick
- Height adjustable from 200 to 350 mm in 25 mm steps + fine adjustement by levelling feet
- Permissible load: 1 000 kg
- Direct fixing to the end plate of the cabinet by M12 screws
- Can be fixed to the floor (screws not supplied)
- Plinth 2 mm thick galvanised steel
- Tile support brackets 1.5 mm thick galvanised steel
- Levelling feet zinc-plated steel with block polypropylene fixed base
- Supplied with complete set of screws for the equipotential link with the cabinet

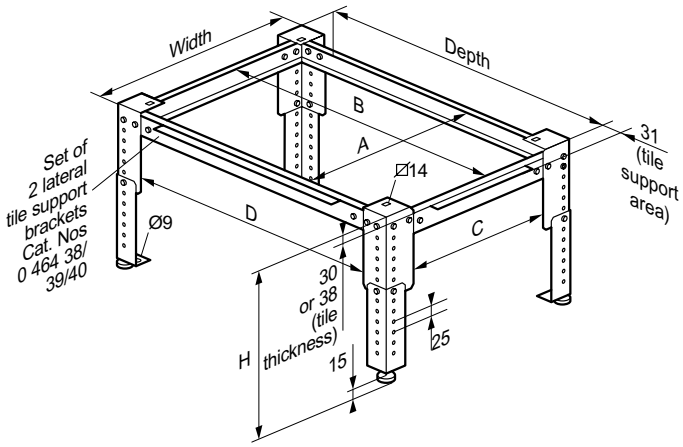


| Cat. No. | Width x Depth | H[1] | | Usable area | | | | Distance (width x depth) | |
|---|---|---|---|---|---|---|---|---|---|
| | | Min. | Max. | A | B | C | D | With cabinet | To the ground |
| 0 464 30 | 600 x 600 | 200 | 350 | 530 | 530 | 435 | 435 | 478 x 478 | 520 x 520 |
| 0 464 31 | 600 x 800 | | | | 730 | | 635 | 478 x 678 | 520 x 720 |
| 0 464 32 | 600 x 1000 | | | | 930 | | 835 | 478 x 878 | 520 x 920 |
| 0 464 34 | 800 x 600 | | | 730 | 530 | 635 | 435 | 678 x 478 | 720 x 520 |
| 0 464 35 | 800 x 800 | | | | 730 | | 635 | 678 x 678 | 720 x 720 |
| 0 464 36 | 800 x 1000 | | | | 930 | | 835 | 678 x 878 | 720 x 920 |

[1] Ajustable in 25 mm steps + fine adjustement

## 7. CABLE MANAGEMENT

### 7.1 Cable entry plates

7.1.1 Presentation

19" LCS² freestanding cabinets have pre-cut 19" format top and bottom cable entries.

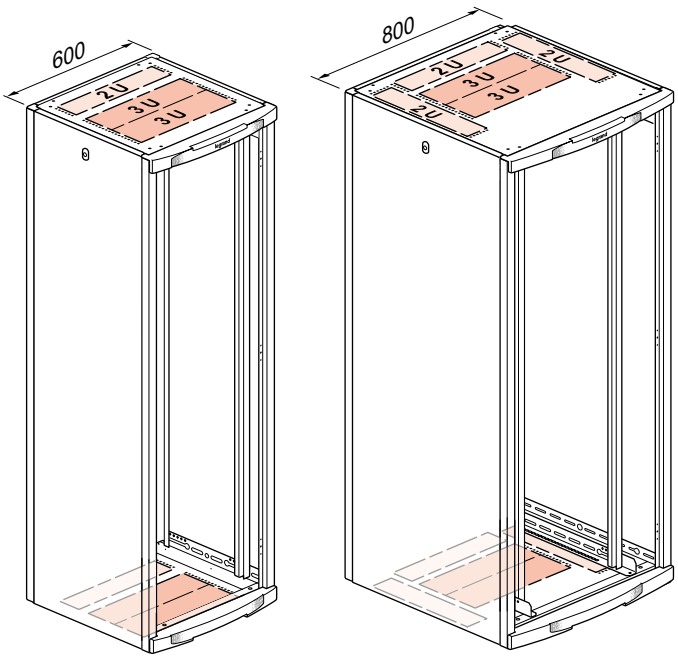


After cutting out the cable entries, they can be equipped with feedthroughs with brushes using the following 19" equipment:

| Cat. No. | Plate with brushes |
|---|---|
| 0 465 28 | Plastic 1U |
| 0 465 29 | Plastic 2U |
| 0 465 30 | Metal 1U |
| 0 465 31 | Metal 2U |

The plastic plates Cat. Nos. 0 465 28/29 clip directly onto the cable entries. They require a flat screwdriver for removal.

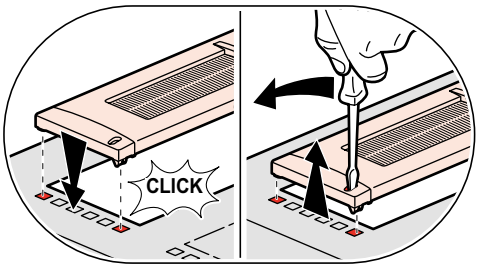


## 7. CABLE MANAGEMENT *(continued)*

### 7.1 Cable entry plates *(continued)*

7.1.1 Presentation *(continued)*

The metal plates are equipped with 2 quick fixings that do not require any screws or tools.

> ⚠ At the top of LCS² cabinets, the metal plates must be fixed using screws and cage nuts with pins in order to provide the equipotential link between the plate and the painted end plate of the cabinet.

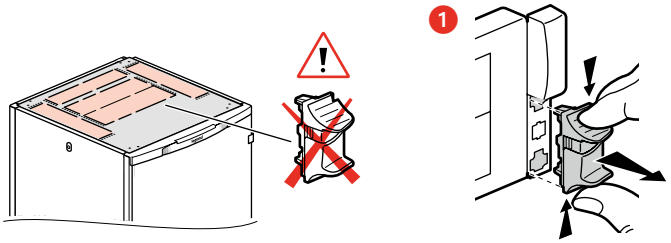


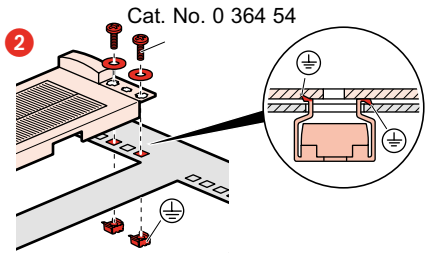


The 3U cable entries also enable the installation of plates with fans Cat. Nos. 0 464 87/88 for thermal management of the cabinet (see section 9.1).

7.1.2 Features

7.1.2.1 Plastic plates

ABS plates equipped with a flexible brush (2 brushes for 2U height). Black RAL 9005

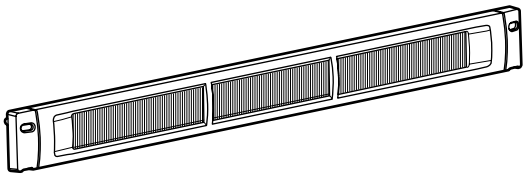

1U plate Cat. No. 0 465 28 (above):
- 2 feedthroughs 125 x 25 mm
- 1 central feedthrough 113 x 25 mm

2U plate Cat. No. 0 465 29:
- 2 feedthroughs 125 x 45 mm
- 1 central feedthrough 113 x 45 mm

## 7. CABLE MANAGEMENT *(continued)*

### 7.1 Cable entry plates *(continued)*

7.1.2 Features *(continued)*

7.1.2.2 Metal plates

Plates 1.5 mm thick steel equipped with a flexible brush
(2 brushes for 2U height).
Black RAL 9005.

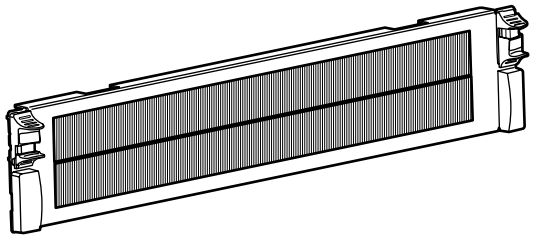

1U plate Cat. No. 0 465 30:
- 1 feedthrough 400 x 23 mm

2U plate Cat. No. 0 465 31 (above):
- 1 feedthrough 400 x 66 mm

### 7.2 Cable trays

7.2.1 Presentation

With the cable management supports, a side and/or rear cable tray can be installed in 19" LCS² freestanding cabinets.

The advantage of the flat cable tray over the U-shaped tray is that the cables flow more easily (no edges).

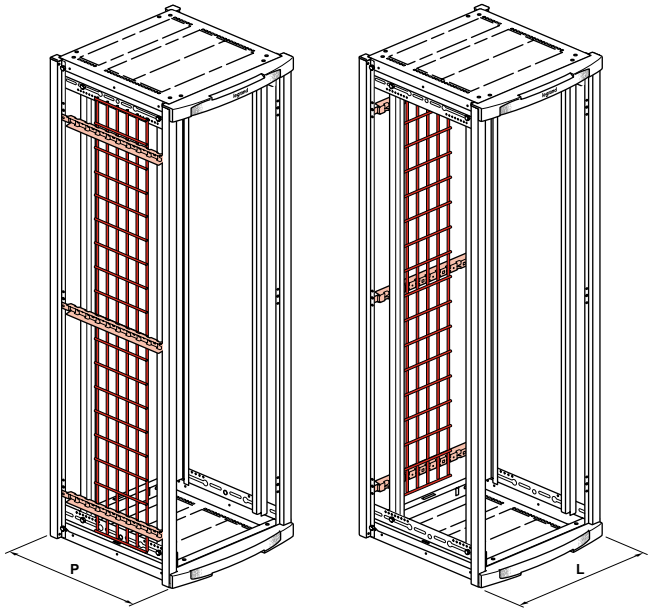


| Cat. No. | Set of 3 supports |
|---|---|
| 0 464 72 | For cabinet width/depth 600 mm |
| 0 464 73 | For cabinet width/depth 800 mm |
| 0 464 74 | For cabinet depth 1000 mm |

| Cat. No. | Flat cable trays |
|---|---|
| 0 464 76 | For 33U cabinet |
| 0 464 77 | For 42U cabinet |

## 7. CABLE MANAGEMENT *(continued)*

### 7.2 Cable trays *(continued)*

7.2.1 Presentation *(continued)*

The supports are fixed onto the structural uprights of the cabinet, and the tray is mounted without screws:

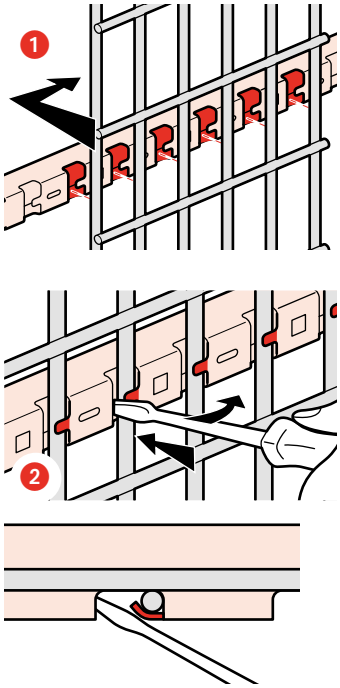


42U 19" LCS² cabinets can also be joined via a cabling unit, providing a solution for easy management of cables and cords (see section 5.2).

7.2.2 Features

7.2.2.1 Cable management supports

- Supplied in sets of 3
- For fixing using self-tapping screws
- Max. diameter of grid wire: 6 mm
- 1.5 mm thick galvanised steel

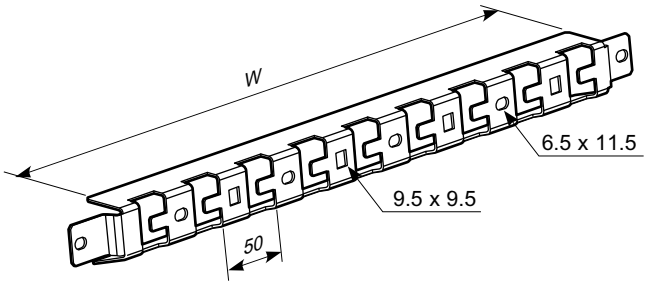


| Cat. No. | W (mm) | No. of tray fixing points | Fixing centre |
|---|---|---|---|
| 0 464 72 | 450 | 9 | 510 |
| 0 464 73 | 650 | 13 | 710 |
| 0 464 74 | 850 | 17 | 910 |

## 7. CABLE MANAGEMENT *(continued)*

### 7.2 Cable trays *(continued)*

7.2.2 Features *(continued)*

7.2.2.2 Flat cable trays

- Frame: 100 x 50 mm
- Zinc-plated steel

| Cat. No. | Overall dimensions (mm) | Wire diameter (mm) |
|---|---|---|
| 0 464 76 | 1405 x 255 | 4.4 |
| 0 464 77 | 1805 x 255 | 4.4 |

### 7.3 Vertical cable management grid

7.3.1 Presentation

800 mm wide 42U 19" LCS² freestanding cabinets can take the vertical cable management grid Cat. No. 0 331 35, fixed onto the outside of the 19" uprights.

The guide has articulated latches. As the latches are clipped on, their direction of opening can be reversed.

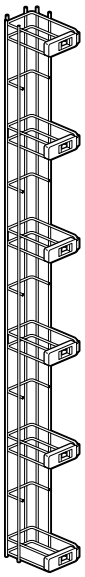

42U 19" LCS² cabinets can also be joined via a cabling unit, providing a solution for easy management of cables and cords (see section 5.2).

7.3.2 Features

- Supplied singly
- Overall dimensions: H 1562 x W 100 X D 155 mm
- Wire diameter: 5 mm
- Steel wire + paint, ABS-PC latches
- Supplied with screws
- Black RAL 9005

## 7. CABLE MANAGEMENT *(continued)*

### 7.4 Vertical cable manager

7.4.1 Presentation

800 mm wide 42U 19" LCS² 42U freestanding cabinets can be fitted with the set of 2 vertical cable manager panels Cat. No. 0 464 80.

The panels are mounted on the outside of the 19" uprights. The wiring is organised using feedthroughs with brushes, cable management rings and slots for cable ties.

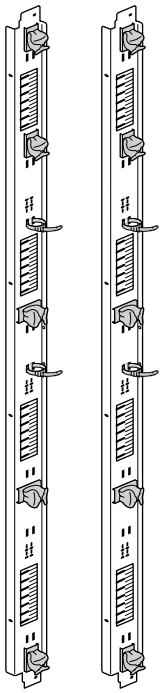

The management rings are plastic and radiate out to provide optimum protection for cords (maintain the bending radius). Each ring clips on horizontally or vertically:

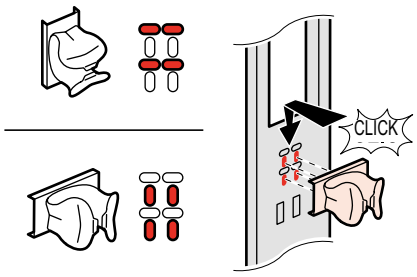


42U 19" LCS² cabinets can also be joined via a cabling unit, providing a solution for easy management of cables and cords (see section 5.2).

## 7. CABLE MANAGEMENT *(continued)*

### 7.4 Vertical cable manager *(continued)*

7.4.2 Features

- Set of 2 panels
- For fixing on 19" uprights and framework
- Ability to adjust the depth of the 19" uprights retained
- Feedthroughs: 174 x 50 mm usable
- Supplied with 8 flexible brushes and 8 stiff brushes (black polyamide fibres)
- Supplied with 10 cable management rings, usable cross-section 4070 mm² (Cat. No. 0 465 42)
- Supplied with 9 cable ties with tightening indicator:
  3 x Cat. No. 0 331 94,
  3 x Cat. No. 0 331 95 and 3 x Cat. No. 0 331 96
- Supplied with screws
- Overall panel dimensions: 1878 x 108 mm
- Panels 1.5 mm thick steel
- Polyamide rings
- Black RAL 9005

### 7.5 Cable ties

7.5.1 Cable ties with tightening indicator

Cable ties with tightening indicator are wide ties with a smooth inner surface for optimum protection of cables. They incorporate a warning system to prevent over-tightening: fusible crescent-shaped pins snap one after the other and act as visual and audible indicators.



Hooks hold the excess strap in place.

The ties are released by pinching the head of the tie and can be re-used.

| Cat. No. | Width (mm) | Length (mm) | Tightening Ø (mm) | |
|---|---|---|---|---|
| | | | Max. | Min. |
| 0 331 94 | 15 | 180 | 35 | 15 |
| 0 331 95 | 15 | 225 | 50 | 35 |
| 0 331 96 | 15 | 320 | 80 | 50 |

- Tensile strength: > 100 N
- Fire resistance: UL 94 HB
- Black high impact PBT

7.5.2 Self-locking cable ties

Self-locking cable ties are repositionable textile ties that do not damage cables.

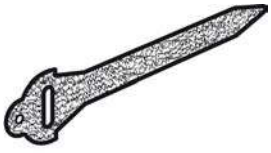

| Cat. No. | Colour | Width (mm) | Length (mm) | Max. tightening Ø (mm) |
|---|---|---|---|---|
| 0 331 84 | Black | 16 | 150 | 35 |
| 0 331 85 | Red | 16 | 150 | 35 |
| 0 331 86 | Green | 16 | 150 | 35 |
| 0 331 87 | Black | 16 | 300 | 80 |
| 0 331 88 | Red | 16 | 300 | 80 |
| 0 331 89 | Green | 16 | 300 | 80 |

- Tensile strength: > 220 N
- Fire resistance: UL 94 V2
- Double-sided textile with "loops" on one side and "hooks" on the other

## 8. VERTICAL EXTENSION

The set of 2 vertical extension uprights Cat. No. 0 464 81 increases the capacity of 42U 800 mm wide 19" LCS² freestanding cabinets by 12 U, giving a total capacity of 54U.

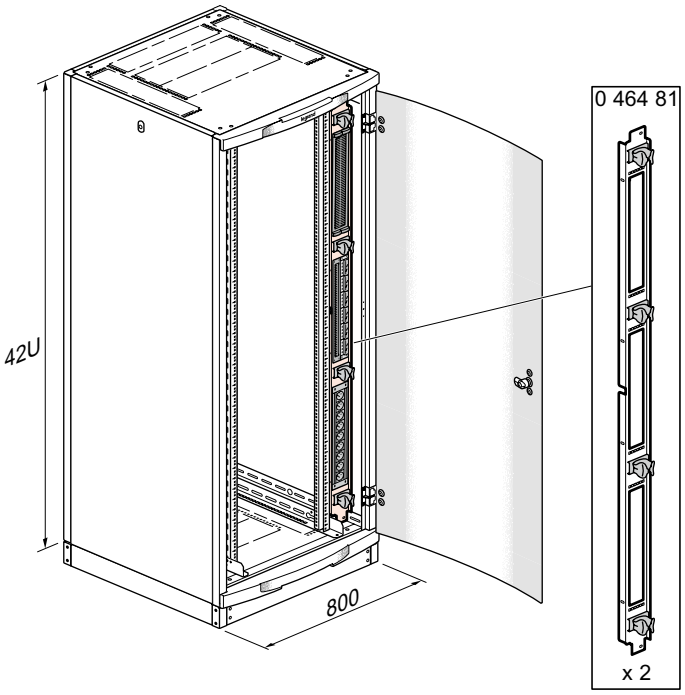


The extension, mounted on either side of 19" uprights, has 6 x 2U positions for mounting 19" equipment vertically (panels, 19" PDUs, etc.).

The cable management rings are plastic and radiate out to provide optimum protection for cords (maintain the bending radius). Each ring clips on horizontally or vertically:

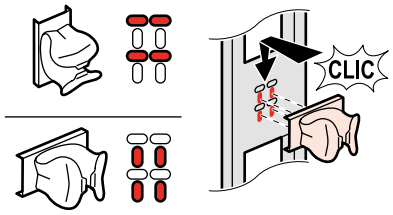


**Features**

- Set of 2 uprights
- For fixing on 19" uprights and framework (top, bottom and central)
- Ability to adjust the depth of the 19" uprights retained
- Positions for 19" equipment: usable area 450 x 90 mm, perforations 9.5 x 9.5 mm
- Supplied with 8 cable management rings, usable cross-section 4070 mm² (Cat. No. 0 465 42)
- Supplied with screws
- Overall dimensions of upright: 1878 x 108 mm
- Uprights 1.5 mm thick steel
- Polyamide rings
- Black RAL 9005

## 9. THERMAL MANAGEMENT

### 9.1 Plates with fans

19" LCS² freestanding cabinets can take plates with fans at the 3U cable entries. Installed in the top of the cabinet, the plates provide a high extraction rate.

| Cat. No. | No. of fans | Output (m³/h) |
|---|---|---|
| 0 464 87 | 2 | 180 |
| 0 464 88 | 3 | 270 |

**Features**

- IP XXB - IK08
- 230 V~ - 50/60 Hz power supply

| Cat. No. | Current (A) | Power (W) |
|---|---|---|
| 0 464 87 | 0.25 | 36 |
| 0 464 88 | 0.37 | 54 |

- Equipped with 3 x 0.75 mm² flexible power supply cable, length 2.5 m
- Fixed using M6 screws and cage nuts with pins (supplied)
- Plate steel + paint finish (same as cabinets)
- Charcoal grey RAL 7016

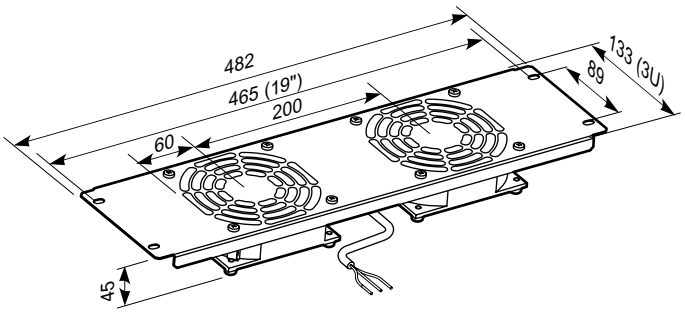


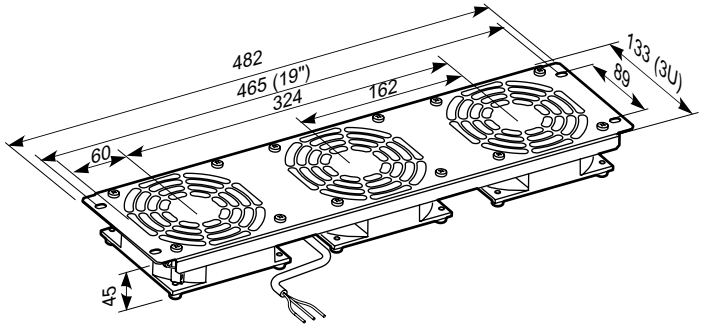


## 9. THERMAL MANAGEMENT *(continued)*

### 9.2 1U ventilation drawers

The ventilation drawers are 19" equipment which provide circulation of the internal air. They provide targeted heat removal and ensure uniformity of the temperature in the cabinet.

| Cat. No. | No. of fans | Depth (mm) |
|---|---|---|
| 0 464 89 | 2 | 150 |
| 0 464 90 | 4 | 300 |

Each fan provides an output of 90 m³/h.

The arrows below indicate the ventilation direction in the operating position:

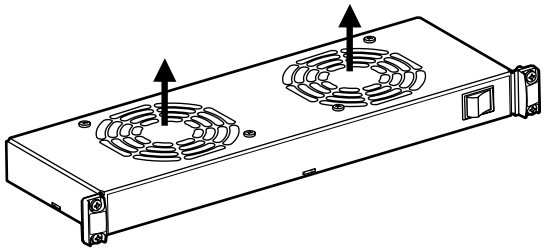

**Features**

- IP XXB - IK08
- 230 V~ - 50/60 Hz power supply per IEC 60320 C14 socket

| Cat. No. | Current (A) | Power (W) |
|---|---|---|
| 0 464 89 | 0.25 | 36 |
| 0 464 90 | 0.5 | 72 |

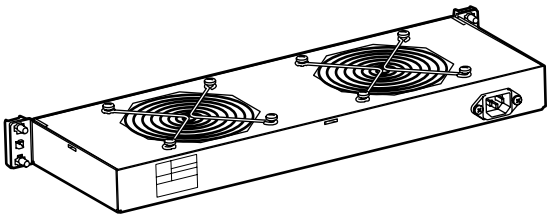

- Supplied with C13 cord - French/German standard plug, length 1.2 m
- Illuminated ON/OFF switch
- For fixing on 2 x 19" uprights using M6 captive screws and 9.5 mm cage nuts with pins (supplied)
- Weight: 3 kg (Cat. No. 0 464 89)
  5.3 kg (Cat. No. 0 464 90)
- Drawer steel
- Black RAL 9005

## 9. THERMAL MANAGEMENT *(continued)*

### 9.2 1U ventilation drawers *(continued)*

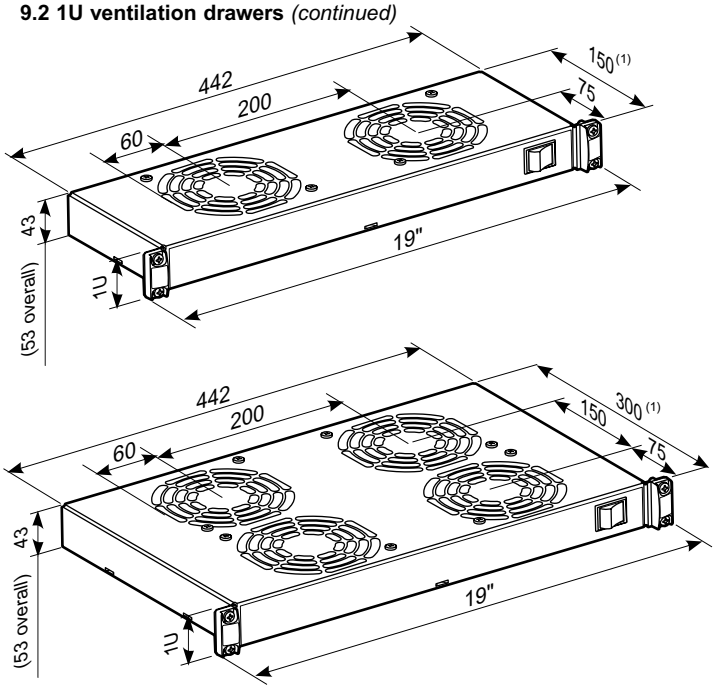


(1) Overall dimensions: +70 mm for back connection

### 9.3 Thermostat

The mechanical thermostat Cat. No. 0 348 48 is used to control the switching on/off of the fans in order to control the temperature inside the cabinets.

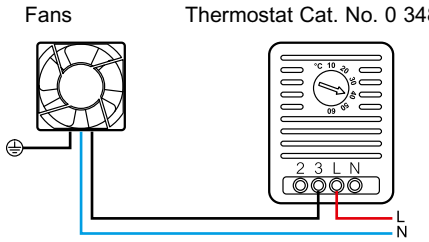


**Features**

- IP20
- 230 V~ - 50/60 Hz
- Adjustment range +5°C to +60°C
- Switching range: 2°C
- NC contact: 5 A, 250 V~
- NO contact: 10 A, 250 V~

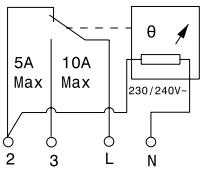


- Connection via 2.5 mm² terminal block
- Class N interfercab. suppression according to VDE 0875
- Magnetic mounting
- Black

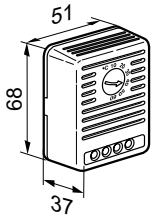


## 10. ACCESSORIES

### 10.1 Anti-tilt kit

The anti-tilt kit Cat. No. 0 464 84 stabilises a 19" LCS² freestanding cabinet (which is not fixed to the floor) when heavy products installed on telescopic equipment are removed.

The kit, which consists of 2 rails fixed under the lower end plate, prevents the cabinet tilting forwards.

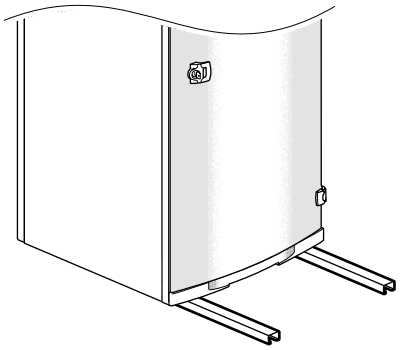

The kit can be mounted before or after installation of the cabinet.

The kit is suitable for all three cabinet depths:

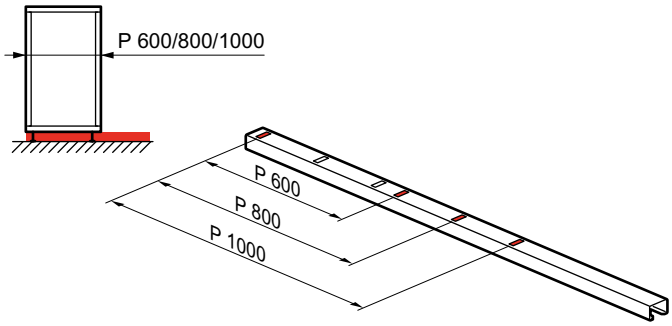


To limit the projection of the rails at the front of the cabinet, another type of mounting is possible for cabinets depth 600/800 mm:

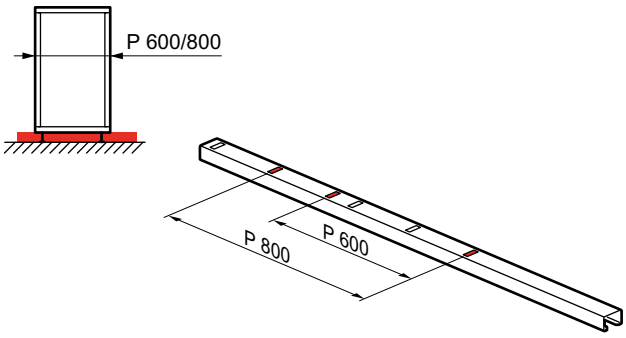


It is essential not to exceed the following dual limit:
- 100 kg total weight installed on runners
- 570 mm projection

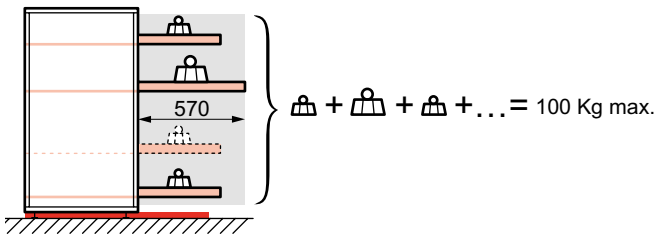

## 10. ACCESSORIES *(continued)*

### 10.1 Anti-tilt kit *(continued)*

**Features**
C-section, length 1400 mm.
Steel + paint finish (same as cabinets)
Supplied with fixing screws
Charcoal grey RAL 7016

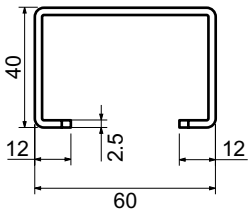


### 10.2 Floor fixing kit

Fixing kit Cat. No. 0 464 86 is used to fix a 19" LCS² freestanding cabinet to the floor permanently. The 4 lugs in the kit, when screwed to the floor, lock the levelling feet of the cabinet.

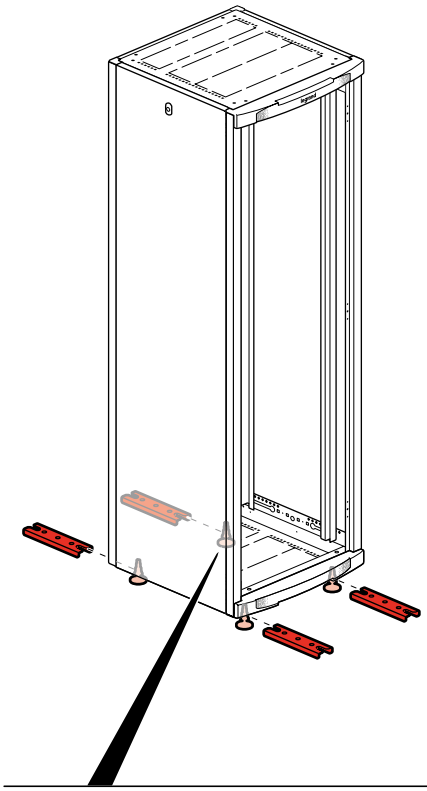

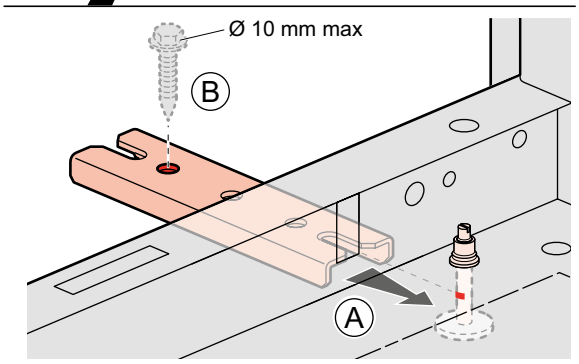


## 10. ACCESSORIES *(continued)*

### 10.2 Floor fixing kit *(continued)*

The kit is used for remote fixing outside the cabinet.

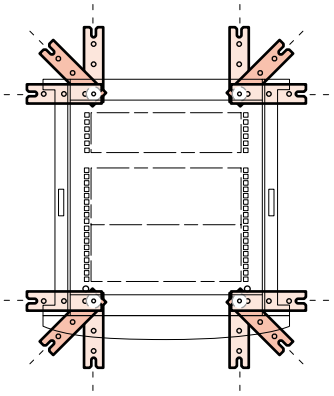

**Features**
Set of 4 galvanised steel lugs (without screws).

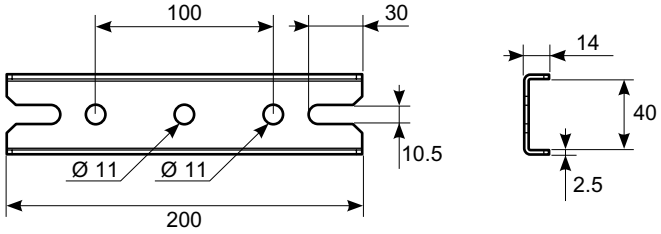


### 10.3 Casters

19" LCS² freestanding cabinets can be equipped with a set of 4 pivoting casters Cat. No. 0 464 83.

> The total load on the 4 casters must not exceed 380 kg.

**Features**
- Set of 4 casters with fixing screws
- Raise cabinet by 70 mm
- Wheels black polyamide

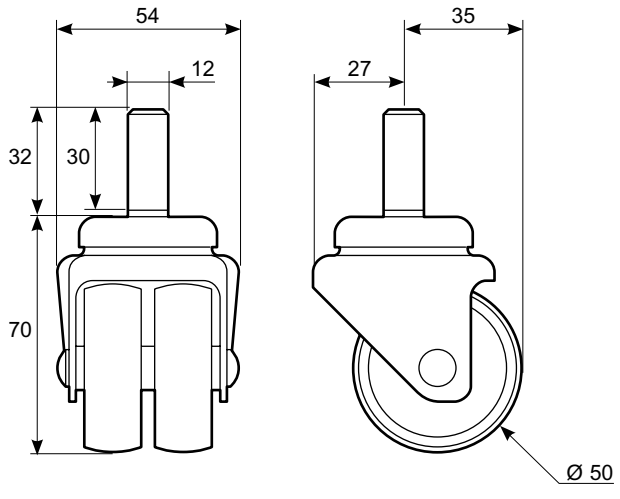

## 10. ACCESSORIES *(continued)*

**10.4 19" lighting kit**
The kit Cat. No. 0 464 85 consists of a 1U 19" panel equipped with a fluorescent light.

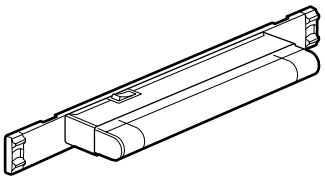

**Features**
- Quick screw-free fixing on 2 x 19" uprights
- Class I
- IP20
- ON/OFF switch
- 230 V~ - 50Hz power supply
- Ferromagnetic ballast
- Rear connection on terminal block
- For Ø 16 mm fluorescent tube, length 288 mm, G13 cap
- Supplied with 8 W white tube
- Panel 1.5 mm thick steel + black RAL 9005 finish

## 11. 19" EQUIPMENT

**11.1 19" management panels**
For ease of mounting, the 19" LCS² panels incorporate a quick fixing:
- The plastic panels clip on directly. The only tool required is a flat screwdriver for their removal (see section 7.1).
- The metal panels are equipped with 2 ergonomic fixings that do not require any screws or tools.

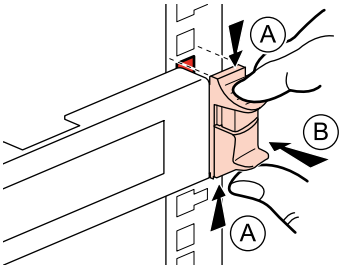


The quick fixing for metal panels is compatible with 1.4 to 2.75 mm thick 19" uprights with 8.25 to 9.5 mm square perforations.
An automatic equipotential link is ensured with 19" LCS² uprights.

Direct clipping on of plastic panels is compatible with 1.5 to 2 mm thick 19" uprights with 9.5 mm square perforations.

## 11. 19" EQUIPMENT *(continued)*

**11.1 19" management panels** *(continued)*

11.1.1 Management panels with 2 axes
- Metal panels with quick fixing
- Horizontal and front to back feedthrough
- Plastic cable management rings radiating out (to protect cords and maintain the bending radius)

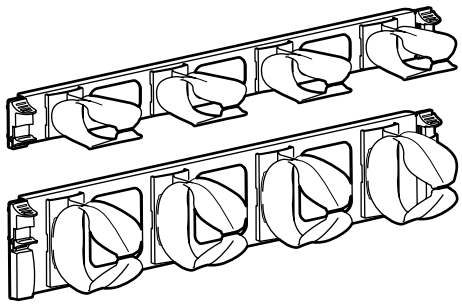

| Cat. No. | Panels with 2 axes | Depth (mm) | Dimensions of feedthroughs (mm) | Rings usable cross-section (mm²) |
|---|---|---|---|---|
| 0 465 22 | Metal 1U | 90 | 30 x 60 | 1890 |
| 0 465 23 | Metal 2U | 90 | 65 x 60 | 4070 |

- Excellent resistance to unclipping under the weight of cables and cords

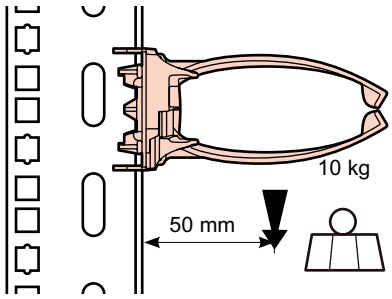


- Panels 1.5 mm thick steel
- Polyamide rings
- Zamak quick fixing
- Black RAL 9005

11.1.2 Management panels with brushes
- Direct clip-on plastic panels

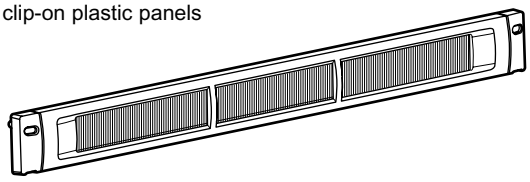

- Metal panels with quick fixing

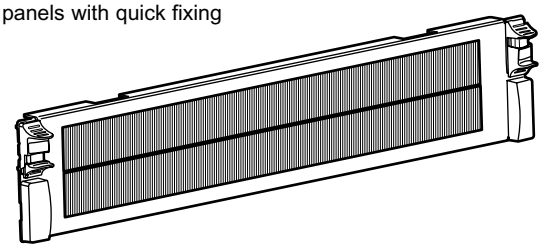

## 11. 19" EQUIPMENT *(continued)*

### 11.1 19" management panels *(continued)*

11.1.2 Management panels with brushes *(continued)*

| Cat. No. | Panels with brushes | Dimensions of brush feedthrough (mm) |
|---|---|---|
| 0 465 28 | Plastic 1U | Side: 125 x 25<br>Central: 113 x 25 |
| 0 465 29 | Plastic 2U | Side: 125 x 45<br>Central: 113 x 45 |
| 0 465 30 | Metal 1U | 400 x 23 |
| 0 465 31 | Metal 2U | 400 x 66 |

- Panels ABS or 1.5 mm thick steel
- Flexible brush (2 brushes for 2U height)
- Zamak quick fixing
- Black RAL 9005

These panels are also used to equip cabinet cable entries with brush feedthroughs (see paragraph 7.1).

11.1.3 Blanking plates

- Direct clip-on plastic plates



- Metal plates with quick fixing



| Cat. No. | Blanking plates |
|---|---|
| 0 465 32 | Plastic 1U |
| 0 465 33 | Plastic 2U |
| 0 465 38 | Metal 1U |
| 0 465 39 | Metal 2U |
| 0 465 40 | Metal 3U |

- Plates ABS or 1.5 mm thick steel
- Zamak quick fixing
- Black RAL 9005

## 11. 19" EQUIPMENT *(continued)*

### 11.2 Fixed shelves

11.2.1 Projecting mounting fixed shelf

- For direct screw-free fixing on 2 x 19" uprights
- Shelf is perfored for a better internal ventilation, and possibility of clamping using cable ties

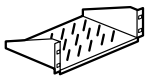

| Cat. No. | Depth (mm) | Usable width (mm) |
|---|---|---|
| 0 465 00 | 115 | 435 |
| 0 465 01 | 200 | 435 |
| 0 465 02 | 360 | 435 |

- Height 2U
- Max. load: 15 kg
- Automatic earthing on 19" LCS² uprights
- 50 x 7 mm oblong perforations
- 1.5 mm thick steel
- Black RAL 9005

**Note:** When mounted towards the front, projecting shelves can be used as temporary work surfaces.

11.2.2 Fixed shelf for fixing on 4 x 19" uprights

- Quick screw-free fixing system
- For mounting on 4 x 19" uprights
- Fixing independent of the depth position of the 19" uprights
- Shelf is perfored for a better internal ventilation, and possibility of clamping using cable ties

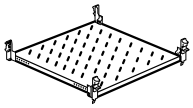

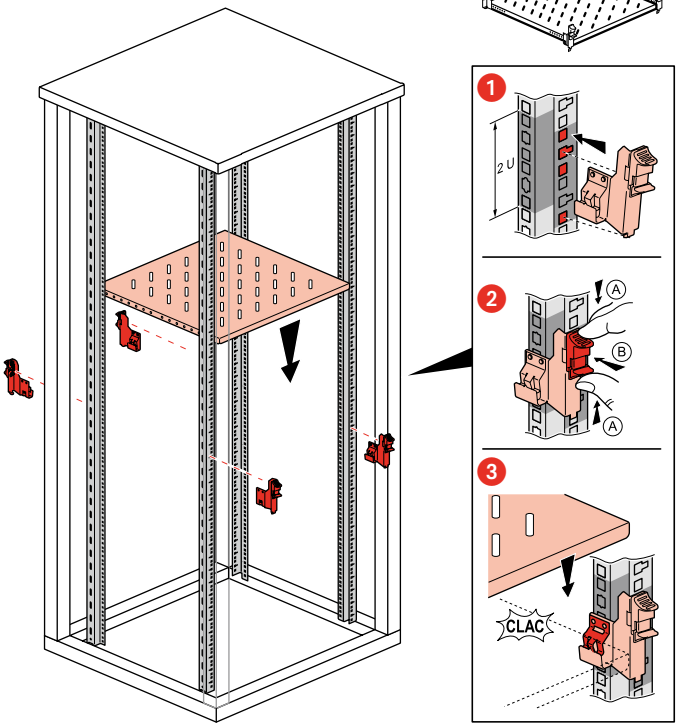


| Cat. No. | For cab. depth (mm) | Depth (mm) | Width (mm) |
|---|---|---|---|
| 0 465 05 | 600 | 425 | 440 |
| 0 465 06 | 800 | 625 | 440 |
| 0 465 07 | 1000 | 825 | 440 |

- Height 1U
- Max. load: 50 kg
- Automatic earthing
- 50 x 7 mm oblong perforations
- Shelf 1.5 mm thick steel
- Black RAL 9005

## 11. 19" EQUIPMENT *(continued)*

### 11.3 Telescopic shelves

- Quick screw-free fixing system
- For mounting on 4 x 19" uprights
- Easy adjustment to the depth position of the 19" uprights
- Shelf is perfored for a better internal ventilation, and possibility of clamping using cable ties
- Locking in open position

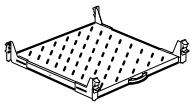

| Cat. No. | For cab. depth (mm) | Depth (mm) | Width (mm) | Travel (mm) |
|---|---|---|---|---|
| 0 465 08 | 600 | 425 | 425 | 320 |
| 0 465 09 | 800 | 625 | 425 | 420 |
| 0 465 10 | 1000 | 625 | 425 | 420 |

- Height 1U
- Max. load: 50 kg
- Automatic earthing
- 50 x 7 mm oblong perforations
- Shelf 1.5 mm thick steel
- Black RAL 9005
- Ball-bearing runners

> ⚠ In case of the risk of tilting when heavy items are removed, the cabinet must be fixed to the floor or stabilised using an anti-tilt kit (see sections 10.1 and 10.2).

### 11.4 Fixed shelf for heavy items

- For mounting on 4 x 19" uprights
- Front fixing via screws
- Adjustment in 12.5 mm intervals to the depth position of the 19" uprights

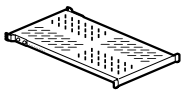

| Cat. No. | For cab. depth (mm) | Depth (mm) | Width (mm) |
|---|---|---|---|
| 0 465 17 | 1000 | 820 | 425 |

- Height 1U
- Max. load: 100 kg
- Supplied with screws and cage nuts with pins
- 50 x 7 mm oblong perforations (possibility of clamping using cable ties)
- 2 mm thick steel
- Black RAL 9005

### 11.5 Keyboard shelf

Shelf for computer screen.

With retractable keyboard support

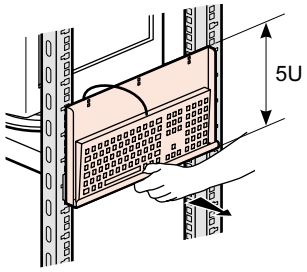


## 11. 19" EQUIPMENT *(continued)*

### 11.5 Keyboard shelf *(continued)*

With sliding shelf for mouse, integrated mat and position for mouse

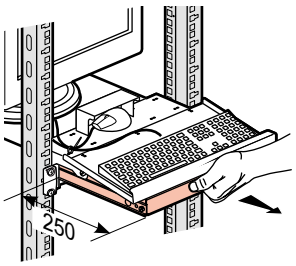


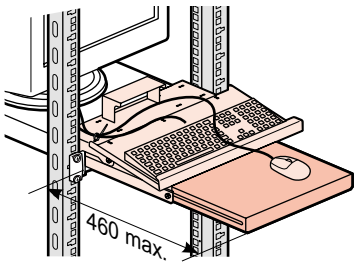


- For mounting on 4 x 19" uprights
- Front fixing via screws
- Min. fixing centre: 625 mm

| | | Shelf for screen | | |
|---|---|---|---|---|
| Cat. No. | For cab. depth (mm) | Depth (mm) | Width (mm) | Usable depth (mm) |
| 0 465 19 | 800 | 625 | 420 | 500 |
| | 1000 | | | |

- Height 1U (5U with vertical keyboard support)
- Max. load: 50 kg
- Supplied with screws and cage nuts with pins
- 1.5 mm thick steel
- Black RAL 9005

### 11.6 Set of 2 fixed sliders

- For fixing on 4 x 19" uprights

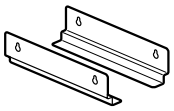

| Cat. No. | For cab. depth (mm) | A (mm) | B (mm) | C (mm) | D (mm) |
|---|---|---|---|---|---|
| 0 465 11 | 600 | 337 | 312 | 382 | — |
| 0 465 12 | 800 | 537 | 512 | 582 | 465 |
| 0 465 13 | 1000 | 737 | 712 | 782 | 654 |

- Max. load: 50 kg
- Supplied with screws
- 1.5 mm thick galvanised steel

**Cat. No. 0 465 11 and 0 465 12**

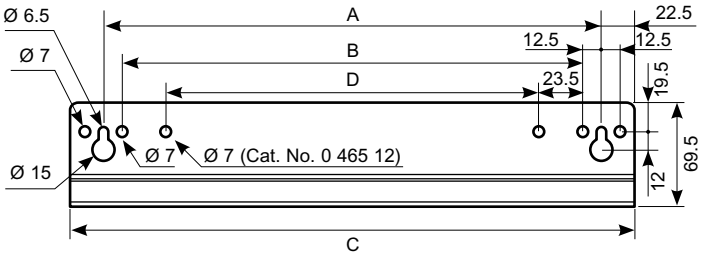


Profile and dimensions when in position in 19" LCS² freestanding cabinets:

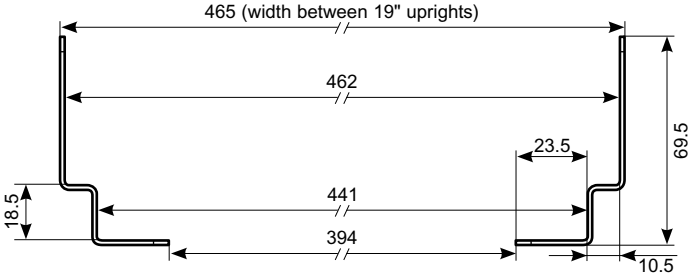

## 11. 19" EQUIPMENT *(continued)*

### 11.6 Set of 2 fixed sliders *(continued)*

**Cat. No. 0 465 13**

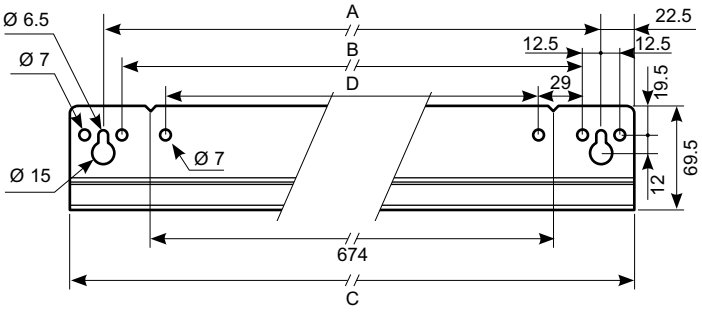


Profile and dimensions when in position in 19" LCS² freestanding cabinets:

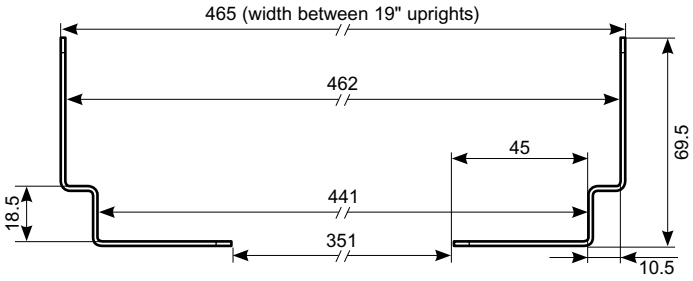


## 12. POWER DISTRIBUTION

### 12.1 Vertical PDUs

- Designed to provide 230 V~ power supply for active products
- For mounting in 42U/47U LCS² freestanding cabinets with a PDU support cat. No. 0 465 75/76 (see section 12.3)
- PDU fixing centre: 1697 mm min - 1703 mm max

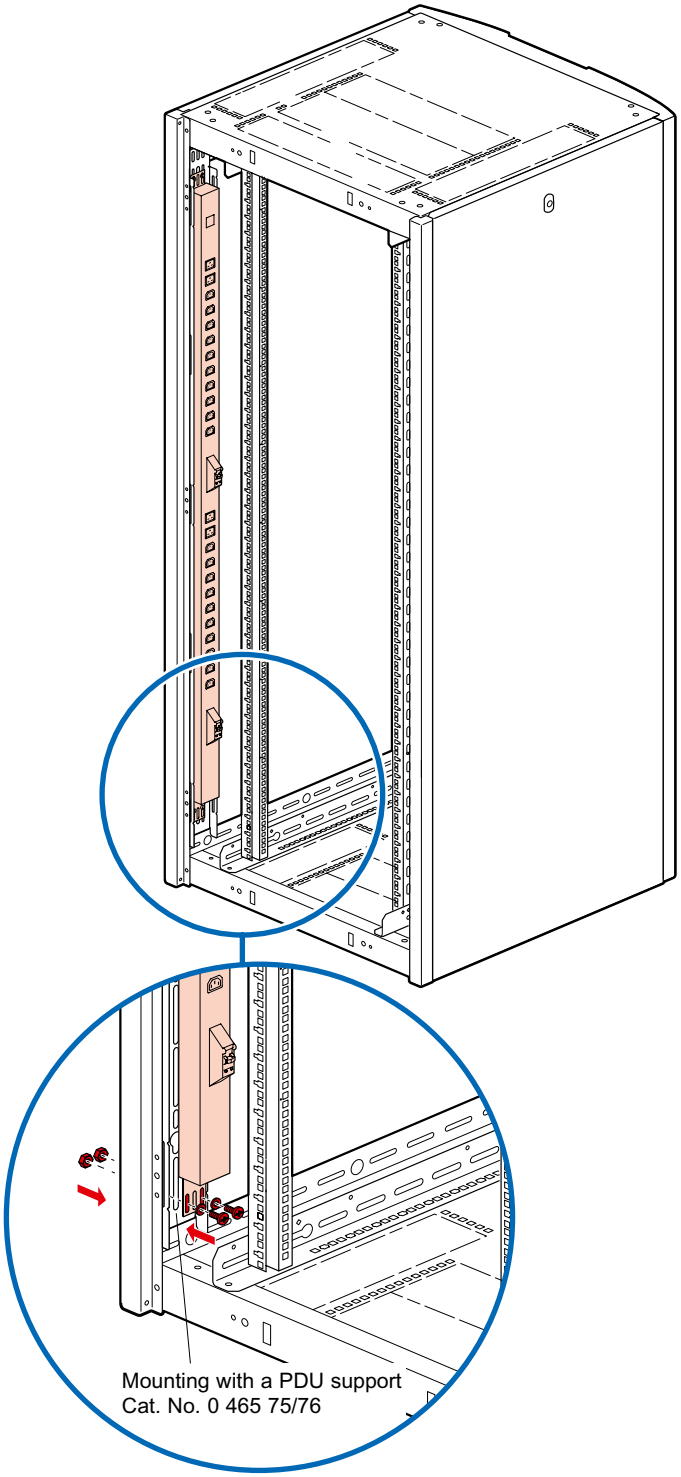


- 2P+E sockets
- Protection of each circuit by circuit breaker
- Circuit breakers equipped with cover for protection against accidental breaks
- Overall dimensions: H 1720 x W 55 x D 51 mm (88 mm overall depth at the circuit breaker slot)
- Supplied with fixing screws
- Black aluminium body, plastic end pieces for fixing

## 12. POWER DISTRIBUTION *(continued)*

### 12.1 Vertical PDUs *(continued)*

12.1.1 Single phase PDU

PDUs comprising 2 circuits.The total number of sockets is distributed equally between the 2 circuits.

Each circuit is identified by colour coding (white sockets and black sockets).

| Cat. No. | 2P+E sockets | | Connection |
|---|---|---|---|
| | Number | Standard | |
| 0 465 81 | 24 | C13 IEC 60320 | 4/6 mm² terminal block via cable gland(1) |
| 0 465 84 | 16 | C13 IEC 60320 | 3x2.5 mm² cord of 3 m lenght with IEC 60309 2P+E plug 32A |
| | 6 | C19 IEC 60320 | |
| 0 465 80 | 24 | French - Belgian | 4/6 mm² terminal block via cable gland(1) |
| 0 465 88 | 24 | German | |
| 0 465 89 | 22 | British | |

(1) Clamping capacity: Ø12 to Ø18 mm

**Features**

| Cat. No. | Power supply | | Use | |
|---|---|---|---|---|
| | Voltage | Max. current | Power(1) | Protection(1) |
| 0 465 81 | 230V - 250V 50/60 Hz | 16A | 3680 W | 16A circuit breaker Single pole + neutral C type |
| 0 465 84 | | | | |
| 0 465 80 | | | | |
| 0 465 88 | | | | 16A circuit breaker Single pole C type |
| 0 465 89 | | | | |

(1) Per circuit

12.1.2 Three-phase PDU

One circuit per phase composed of 8 C13 sockets + 1 C19 socket.

| Cat. No. | 2P+E sockets | | Connection |
|---|---|---|---|
| | Number | Standard | |
| 0 465 85 | 24 | C13 IEC 60320 | 5x4 mm² cord of 3 m lenght with IEC 60309 3P+N+E plug 32A |
| | 3 | C19 IEC 60320 | |

**Features**

| Cat. No. | Power supply | | Use | |
|---|---|---|---|---|
| | Voltage | Max. current | Power(1) | Protection(1) |
| 0 465 85 | 380V 50/60 Hz | 32A | 3680 W | 16A circuit breaker Single pole + neutral C type |

(1) Per circuit/phase

## 12. POWER DISTRIBUTION *(continued)*

### 12.1 Vertical PDUs *(continued)*

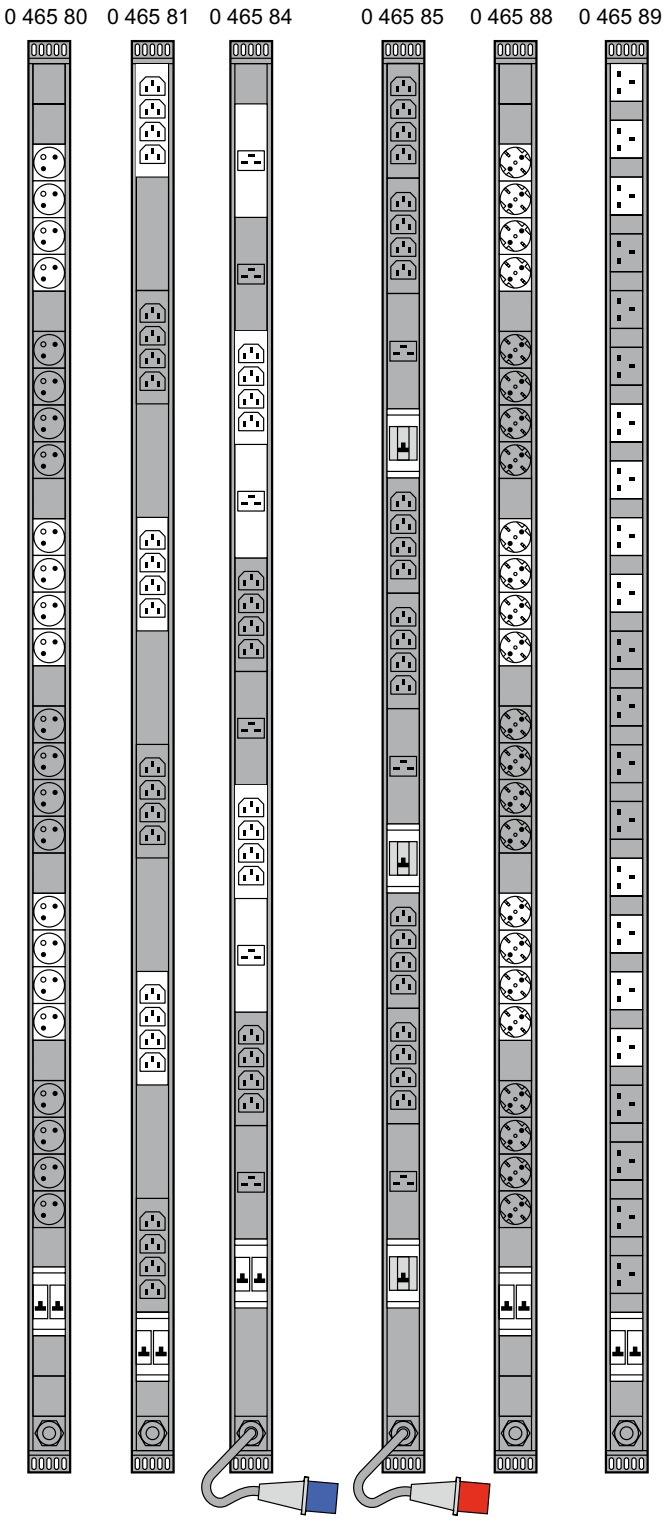


Legrand also has a range of 19" PDU and vertical PDU with intensity measure ability. To know all the features of these metered PDU, consult the specific data sheet.

## 12. POWER DISTRIBUTION *(continued)*

**12.2 19" PDUs**

- Designed to provide 230 V~ power supply for active products
- For mounting on 19" fixing centre
- 180° reversible end pieces for 2 fixing options:

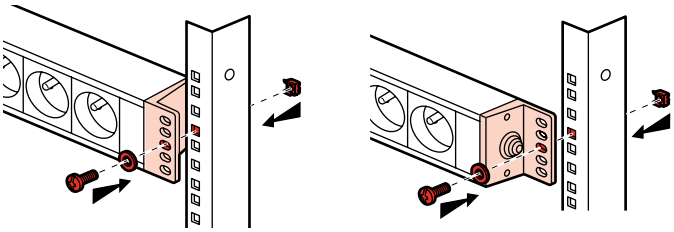

- 2P+E sockets
- Connection via 2.5 mm² terminal block
- Overall dimensions: H 55 x W 483 x D 52 mm (Cat. No. 0 332 37, 88 mm overall depth at the circuit breaker slot)
- Provide a 2U space
- Supplied with screws and cage-nuts
- Black aluminium body, plastic end pieces for fixing

12.2.1 Socket PDU

| Cat. No. | 2P+E sockets | | Additional function | Colour |
|---|---|---|---|---|
| | Number | Standard | | |
| 0 465 51 | 12 | C13 IEC 60320 | — | Black |
| 0 465 52 | 9 | C19 IEC 60320 | — | |
| 0 465 50 | 9 | French - Belgian | — | Black |
| 0 465 54 | 6 | | — | |
| 0 332 88 | 6 | | Switch with indicator | Alumin. grey White sockets |
| 0 332 37 | 6 | | Circuit breaker | |
| 0 332 87 | 6 | | Tamperproof for uninterruptible power supply (UPS) | Alumin. grey Red sockets |
| 0 465 60 | 9 | German | — | Black |
| 0 465 62 | 6 | | — | |
| 0 332 38 | 6 | | Circuit breaker | Alumin. grey White sockets |
| 0 465 65 | 6 | British | — | Black |
| 6 339 00 | 5 | | | Alumin. grey White sockets |

Legrand also has a range of 19" PDU and vertical PDU with intensity measure ability. To know all the features of these metered PDU, consult the specific data sheet.

## 12. POWER DISTRIBUTION *(continued)*

**12.2 19" PDUs** *(continued)*

12.2.1 Socket PDU *(continued)*

**Features**

| Cat. No. | Power supply | | Use | |
|---|---|---|---|---|
| | Voltage | Max. current | Power | Protection |
| 0 465 51 | 230V - 250V 50/60 Hz | 10A | 2500 W | — |
| 0 465 52 | | 16A | 3680 W | |
| 0 465 50 | | | | |
| 0 465 54 | | | | |
| 0 332 88 | | | | |
| 0 332 37 | | | | 16A circuit breaker 2 pole C type |
| 0 332 87 | | | | — |
| 0 465 60 | | | | |
| 0 465 62 | | | | |
| 0 332 38 | | | | 16A circuit breaker 2 pole C type |
| 0 465 65 | | 13A | 2990W | — |
| 6 339 00 | | | | |

12.2.2 PDU with surge protector

- Provides protection against mains overvoltages while keeping sockets energised
- Replacement of protection with surge protector module Cat. No. 0 775 41 (indication by red LED)

| Cat. No. | 2P+E sockets | | Additional function | Colour |
|---|---|---|---|---|
| | Number | Standard | | |
| 0 332 78 | 6 | French - Belgian | Surge protector Switch with indicator | Alumin. grey White sockets |

**Features**

| Cat. No. | Power supply | | Use | |
|---|---|---|---|---|
| | Voltage | Max. current | Power | Protection |
| 0 332 78 | 230V - 250V 50/60 Hz | 16A | 3680 W | — |

## 12. POWER DISTRIBUTION *(continued)*

**12.2 19" PDUs** *(continued)*

12.2.3 PDU to be equipped

| Cat. No. | Capacity | Colour |
|---|---|---|
| 0 332 79 | 16 Mosaic modules | Alumin. grey |

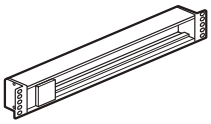

**12.3 PDU supports**

- Vertical supports to be fixed at the side back of 42U/47U 19" LCS² cabinets
- Make possible the mounting of the vertical PDU in 19" LCS² cabinets (see section 12.1)
- Can receive 19" PDU vertically
- Many possibilities of fixing by screw. PDU with buttons can be fixed by hanging all 7U

| Cat. No. | For cabinet capacity |
|---|---|
| 0 465 75 | 42U |
| 0 465 76 | 47U |

- Supplied with fixing screws
- 1.5 mm thick galvanised steel

## 12. POWER DISTRIBUTION *(continued)*

**12.3 PDU supports** *(continued)*

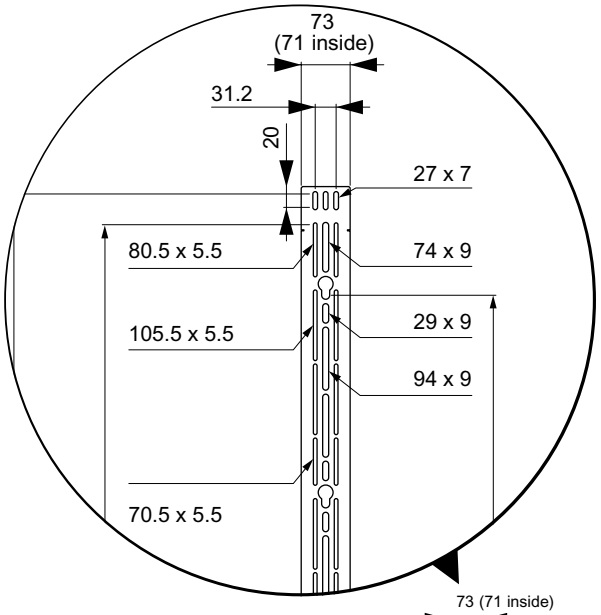


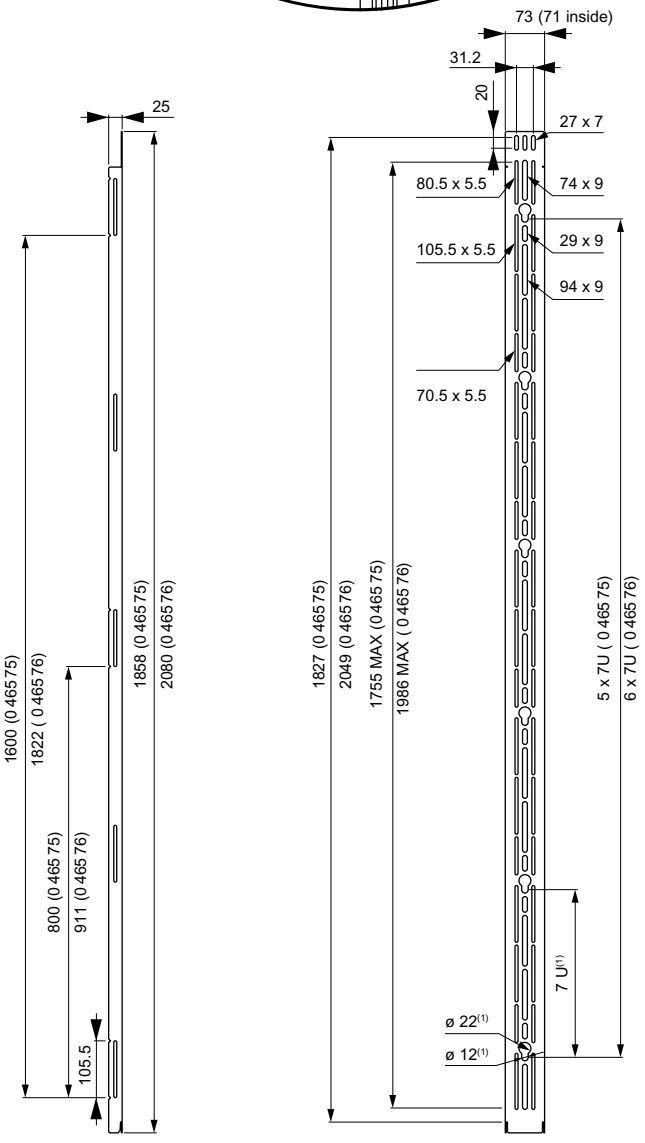


(1) For mounting PDU with buttons

## 12. POWER DISTRIBUTION *(continued)*

**12.4 Multi-application DIN rail kit**

- For mounting modular devices on 19" fixing centre (circuit breakers, Legrand multimedia network components… etc)
- Capacity 24 modules
- Height 4 U (to respect the bending radius of the network cables)
- Max current: 32A

12.4.1 DIN profile rail with front panel

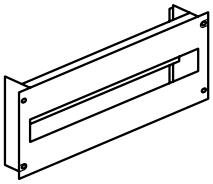

- Cat. No. 0 465 46
- Comprises a front panel, and 15 mm deep rail equipped with brackets for 19" fixing centre
- IPXXC (front part only)
- Supplied with a 24 modules blanking plate, screws and cage-nuts
- Rail, fixing brackets and front panel made of steel
- Black RAL 9005 (front panel)

12.4.2 Rear cover

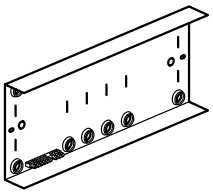

- Cat. No. 0 465 47
- Used with cat. No. 0 465 46 (DIN profile rail with front panel)
- To be used for heigh current applications (greater than 50 V)
- Ensure IPXXB
- Compatible with EMC requirements
- Supplied with terminal block for protection conductors (1X6 to 25 and 8X1.5 to 16 $mm^2$), 12 cable entry glands for Ø 22 mm and fixing screws
- 1.5 mm thick galvanised steel