Product Data Sheet **8300100679**
VWCE040KJDGS
AF40-00679

ebmpapst

engineering a better life



AF40-00679

INDEX

1 General 3

2 Mechanics 3

2.1 General 3
2.2 Connections 3

3 Operating Data 4

3.1 Electrical Interface - Input 4
3.2 Electrical Operating Data 5
3.3 Electrical Interface - Output 6
3.4 Electrical Features 7
3.5 Aerodynamics 8
3.6 Sound Data 9

4 Environment 9

4.1 General 9
4.2 Climatic Requirements 9
4.3 EMC 10

5 Safety 11

5.1 Electrical Safety 11
5.2 Approval Tests 11

6 Reliability 11

6.1 General 11

1 General

Fan type	Axial	
Rotating direction looking at rotor	Counterclockwise	
Airflow direction	Air outlet over struts	
Bearing system	Ball bearing	
Mounting position - shaft	Any	

Note: To comply with the specified voltage range, an additional external circuit may be necessary from a cable length of 1m.

2 Mechanics

2.1 General

Width	40 mm	
Height	40 mm	
Depth	28 mm	
Mass	54 g	
Housing material	Plastic	
Impeller material	Plastic	
Max. torque when mounted across both mounting flanges Screw size	Wire outlet corner: 30 Ncm Remaining corners: 30 Ncm ISO 4762 - M3 degreased, without an additional brace and without washer	
Rotor protrusion max.	0 mm	

2.2 Connections

Electrical connection	Wires	
Lead wire length Tolerance	L = 310 mm + 20 mm	
Wire size (AWG)	26	
Insulation diameter	1 mm	



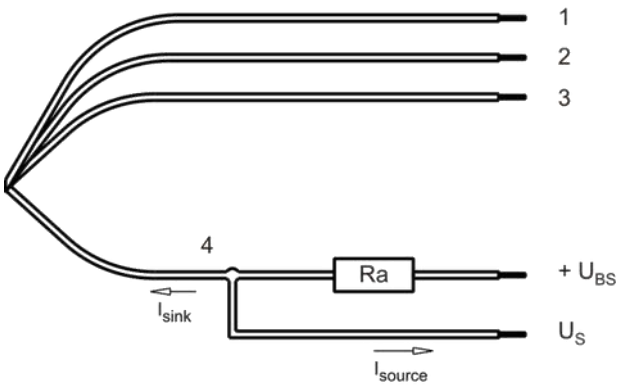

Wire	Color	Operation	Wire size	Insulation diameter
1	red	+ UB	AWG 26	1 mm
2	blue	- GND	AWG 26	1 mm
3	violet	PWM	AWG 26	1 mm
4	white	Tacho	AWG 26	1 mm

The auxiliaries shown on the schematic diagram (which are required for the intended use) are not part of our delivery.

3 Operating Data

3.1 Electrical Interface - Input

Control input	PWM

Features

Input type	Open collector	
PWM - Frequency		1 kHz - 25 kHz typical: 2 kHz

Characteristics	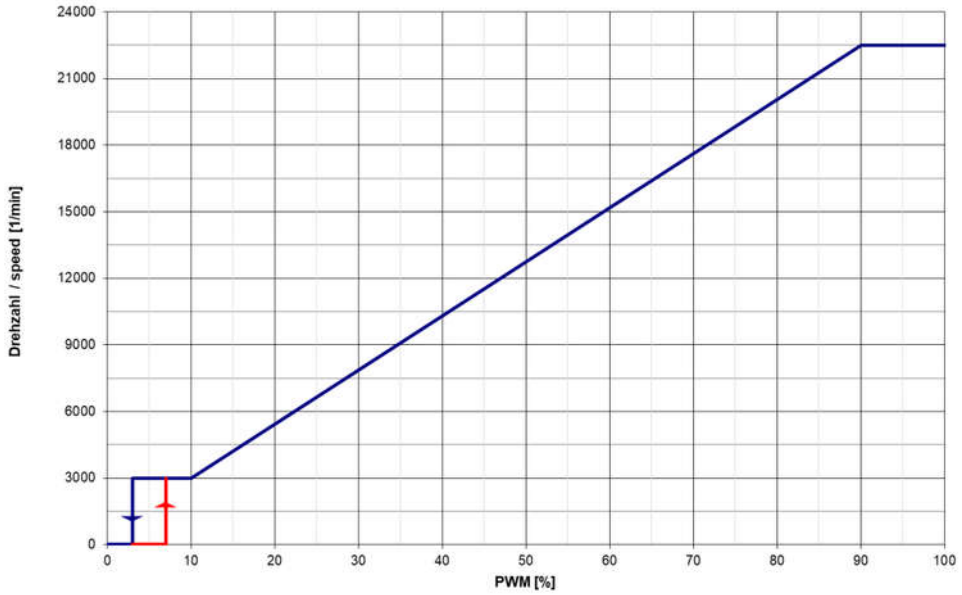
Schematics	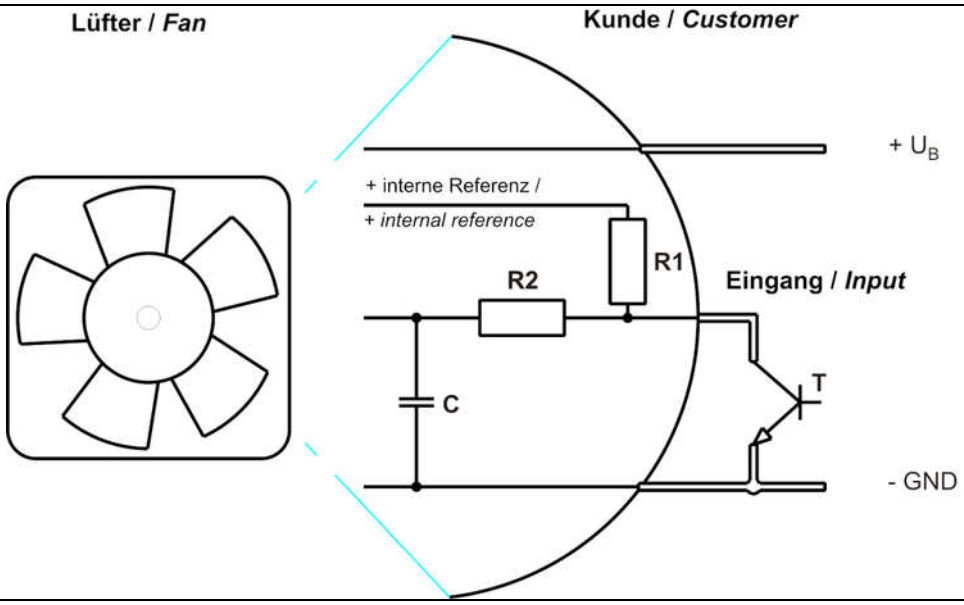

Speed control: 0... 100 %, PWM-Low < 0,2V

3.2 Electrical Operating Data

Measurement conditions: Normal air density = 1,2 kg/m3; Temperature 23°C +/- 3°C; Motor axis horizontal; warm-up time before measuring 15 minutes. In the intake and outlet area should not be any solid obstruction within 0,5 m.

Δp = 0: corresp. to free air flow (see chapter aerodynamics)
I: corresp. to arithm. mean current value

Name	Condition		
PWM 0001	PWM: 100 %; f: 2 kHz		

Features	Condition	Symbol	Values		
Voltage range		U	18 V		28 V
Nominal voltage		U_N		24 V	
Power consumption Tolerance	Δp = 0 PWM 0010	P	13 W +- 20 %	13 W +- 20 %	13 W +- 20 %
Current consumption Tolerance	Δp = 0 PWM 0010	I	700 mA +- 20 %	550 mA +- 20 %	450 mA +- 20 %
Speed Tolerance	Δp = 0 PWM 0010	n	22.500 1/min +- 5 %	22.500 1/min +- 5 %	22.500 1/min +- 5 %
Starting current consumption				<= 2.000 mA	

3.3 Electrical Interface - Output

Tacho type	/2 (open collector)

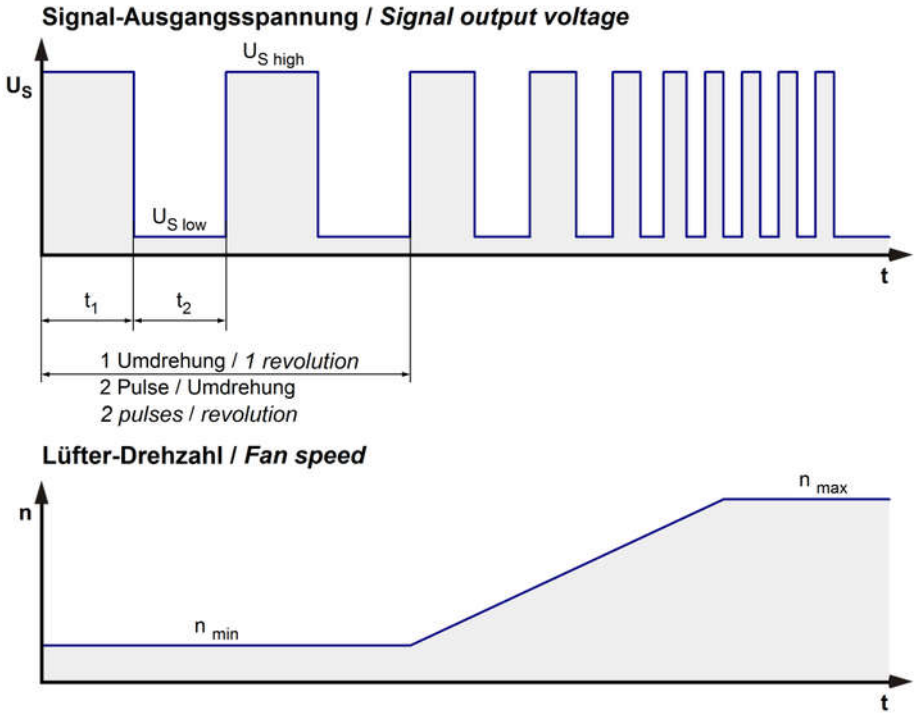

$$Ra = \frac{U_{BS} - U_{S\,low}}{I_{sink}}$$

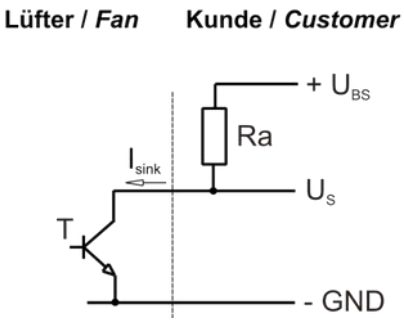

Features		Note	Values
Tacho operating voltage	U_{BS}		<= 30 V
Tacho signal Low	$U_{S\,low}$	I sink: 2 mA	<= 0,4 V
Tacho signal High	$U_{S\,high}$	I source: 0 mA	<=30 V
Maximum sink current	I_{sink}		<= 4 mA
External resistor		External resistor Ra from UBS to US required. All voltages measured to GND.	
Tacho frequency		(2 x n) / 60	
Tacho isolated from motor		No	
Slew rate			>= 0,5 V/us

n in revolutions per minute (1/min)

3.4 Electrical Features

Electronic function	Speed-Controlled	
Reversed polarity protection Max. residual current at U_N	N-CH FET I_F <= 1 mA	
Locked rotor protection	Auto restart	
Locked rotor current at U_N	I_{block} approx. 1.500 mA	
Clock signal at locked rotor Extended Downtime	t_3 / t_4 typical: 0,25 s / 0,8 s t_5: 5 s after 5 start attempts	
Internal fuse	None	

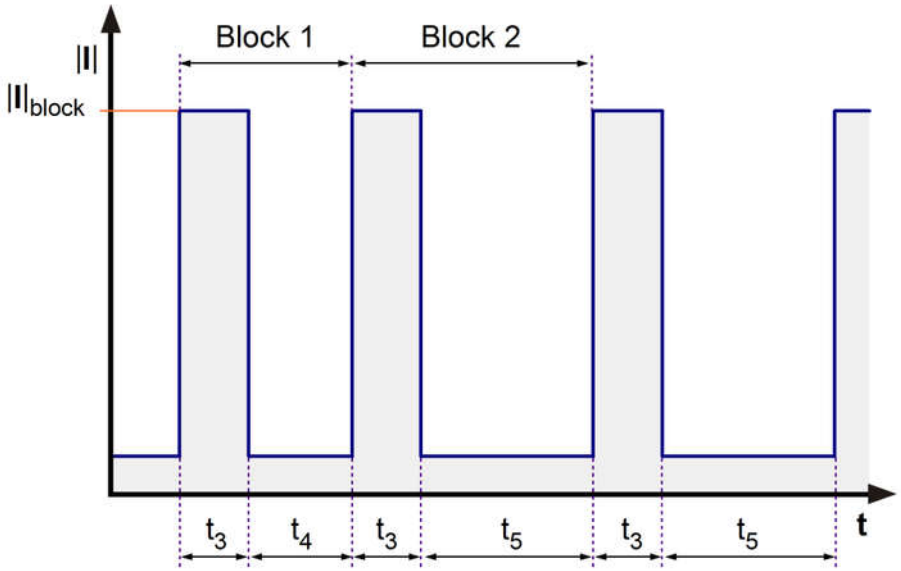

First five blocks: Block1 t3/t4 typically 0.25s/0,8s.
Afterwards cyclical: Block2 t3/t5 typically 0.25s/5s.

3.5 Aerodynamics

Measurement conditions:	Measured with a double chamber intake rig acc. to DIN EN ISO 5801. Normal air density = 1,2 kg/m3; Temperature 23°C +/- 3°C; In the intake and outlet area should not be any solid obstruction within 0,5 m. Motor shaft horizontal. The information is only valid under the specified test conditions and may be changed by the installation conditions. If there are deviations from the standard test conditions, the characteristic values must be checked under the installed conditions. Power consumption of the fan motor when operating at normal voltage is shown. Depending on the operating conditions of the application, the power input may be higher.

a.) Operation condition:

22.500 1/min at free air flow	PWM 100 %; f: 2 kHz	

Max. free-air flow (Δp = 0 / $\dot{V}$ = max.)	44 m3/h	
Max. static pressure (Δp = max. / $\dot{V}$ =0)	1.100 Pa	

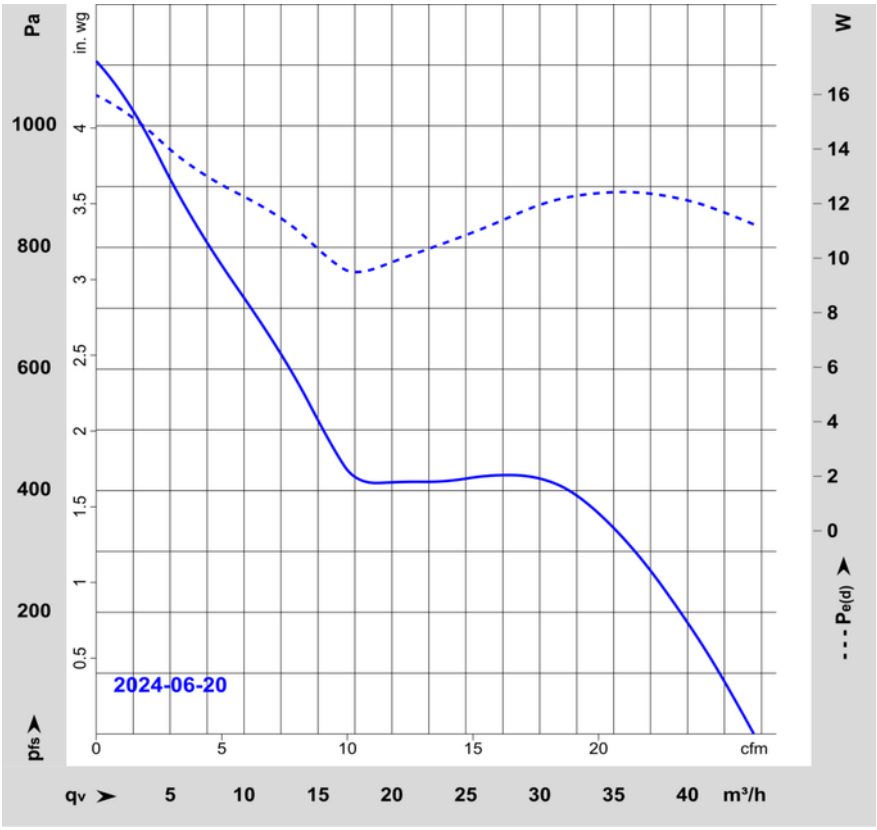

3.6 Sound Data

Measurement conditions:	Sound pressure level: 1 meter distance between microphone and the air intake. Sound power level: According to ISO 10302-1 Measured in a semi anechoic chamber with a background noise level of Lp(A) < 5 dB(A) For further measurement conditions see chapter aerodynamics.

a.) Operation condition:

22.500 1/min at free air flow	PWM 100 %; f: 2 kHz	

Optimal operating point	31 m3/h @ 410 Pa	
Sound power level at the optimal operating point	7,2 bel(A)	
Sound pressure level at free air flow, measured in rubber bands	60 dB(A)	

4 Environment

4.1 General

Min. permitted ambient temperature TU min.	-40 °C	
Max. permitted ambient temperature TU max.	70 °C	
Min. permitted storage temperature TL min.	-40 °C	
Max. permitted storage temperature TL max.	80 °C	

4.2 Climatic Requirements

IP-protection type (certified)	IP 68 (for fan only, not for connector if applicable) **)	

**) The specification of the IP protection refers to the conditions mentioned in certification of the fan. The above mentioned short description of the protection scope is not final. For detailed information of the respective protection scope and definitions, see certification as well as DIN EN 60529 (protection by housings) and ISO 20653 (for vehicles) with the letter K.

Short description of the IP-protection type:
Solid particle Protection: Dust tight.
Protection against deliberate contact: Protected against contact to hazardous parts with a wire.
Protection against water: The fan test according to IP68 (Based on IEC 60529), is conducted in non-operating mode. The fan is tested by a complete immersion in water for a period of 2h at a water-level of 1,2m. Electrical connections are not immersed since they are customer specific.

Please require severity levels and specification parameters from the responsible development departments.

4.3 EMC

Kind	**Radiated Emission; 30 MHz - 1000 MHz (without PE)**
According	DIN EN 55032:2016-02
Test severity/ Limit	Class B
Result	Below limit Class B

Kind	**Electrostatic Discharge Immunity Test**
According	DIN EN 61000-4-2:2001-12
Test severity/ Limit	Contact Discharge +/- 4 kV; Air Discharge +/- 8 kV
Result	A: The monitored function operates as designed during and after exposure to a disturbance.

Kind	**Electromagnetic Field Immunity Test**
According	DIN EN 61000-4-3:2006-12
Test severity/ Limit	10 V/m; 80 - 1000 MHz; AM; m = 0,8; f = 1 kHz; 1%; t = 3 s
Result	A: The monitored function operates as designed during and after exposure to a disturbance.

Kind	**Electrical Fast Transient / Burst Immunity Test**
According	DIN EN 61000-4-4:2005-07
Test severity/ Limit	+/- 2 kV on Power Lines; Coupling: POS, NEG, {PE}, ALL, 5 kHz and 100 kHz; 1 min
Result	A: The monitored function operates as designed during and after exposure to a disturbance.

Kind	**Immunity to Conducted Disturbances, Induced by RF-Fields**
According	DIN EN 61000-4-6:2001-12
Test severity/ Limit	10 Vrms; 150 kHz - 80 MHz; AM; m = 0,8; f = 1 kHz; 1%; t = 3 s
Result	A: The monitored function operates as designed during and after exposure to a disturbance.

5 Safety

5.1 Electrical Safety

Dielectric strength DIN EN 62368 and DIN EN 60335 A.) Type test Measuring conditions: After 48h of storage at 95% R.H. and 25°C. No arcing or breakdown is allowed! All connections together to ground. B.) Routine test Measuring conditions: At indoor climate. No arcing or breakdown is allowed! All connections together to ground.	500 VAC / 1 Min. 850 VDC / 1 Sec.	
Isolation resistance Measuring conditions: After 48h of storage at 95% R.H. and 25°C measured with U=500 VDC for 1 min.	RI > 10 MOhm	
Clearance / creepage distance	1,0 mm / 1,2 mm	
Protection class	III	

5.2 Approval Tests

CE	EC Declaration of Conformity	Yes
EAC	Eurasian Conformity	No
UL	Underwriters Laboratories	Yes / UL507, Electric Fans E38324
EU	safety mark for Europe	Yes/ Approval according to EN 62368 - Equipment for audio/video, information, and communication technology
CSA	Canadian Standards Association	Yes / CSA audited by UL according to C22.2 No. 113 Fans and Ventilators
CCC	China Compulsory Certification	Not applicable

6 Reliability

6.1 General

Life expectancy L10 at TU = 40 °C	70.000 h	
Life expectancy L10 at TU max.	35.000 h	
Life expectancy L10 acc. to IPC 9591 at TU = 40 °C	117.500 h	

The reproduction, distribution and utilization of this document as well as the communication of its contents to others without express authorization is prohibited. Offenders will be held liable for the payment of damages. All rights reserved in the event of the grant of a patent, utility model or design. Refer to protection notice ISO 16016! Note in the case of multilingual information in this document and in the applicable documents referred to in this document, only the English version shall be authoritative and legally binding in the event of contradictions in content.

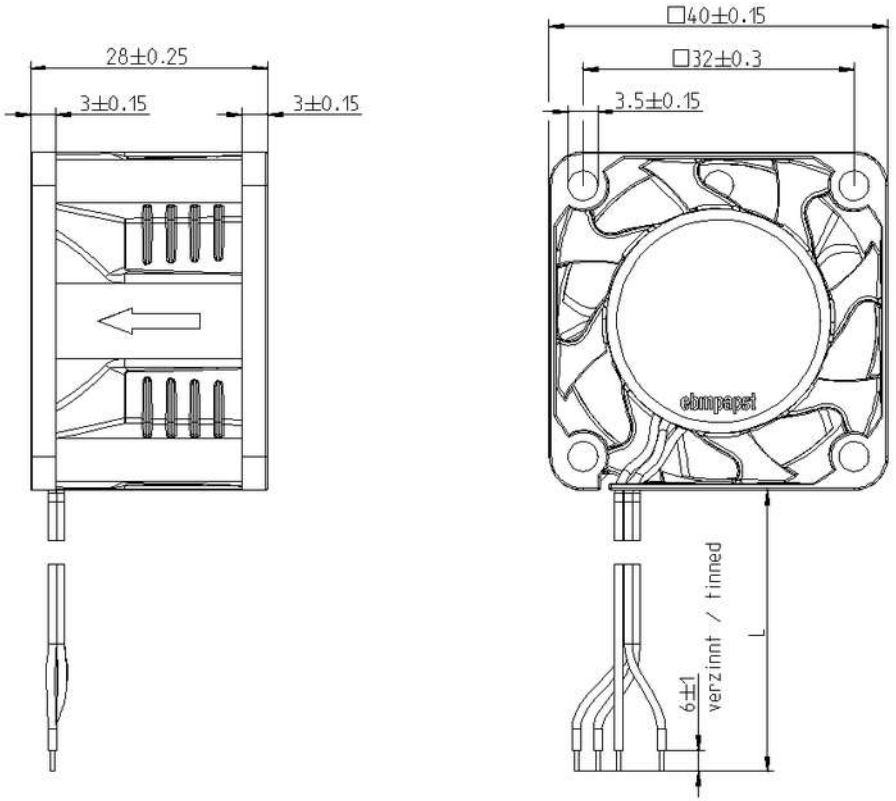

- kein Axialspiel der Kugellager durch Federausgleich /
  No axial clearance of the ball bearings due to a pre-load spring
- Anzahl und Länge der Litzen siehe Produktspezifikation
  Number an length of the wires see product specification

Title				Digital sign					
First created for	Index	Doc type	Sheet						
	Designed name		Designed date						
Substitute for	Released name See digital sign		Released date See digital sign						
ebmpapst ebm-papst St.Georgen GmbH & Co. KG			Tolerances						
	Scale 2:1	Format A3	Document status See digital sign	Ind.	KM-Nr.	Date	Name	Fit	Deviations
				2D-CAD:				Size	
				3D-CAD:					