B2, B3, B4, B5, B6 Measuring Shunts

Features

1A ... 18 kA

Class 0.5

DIN 35 mm

Inputs

I

DC

Outputs

50 mV

60 mV

75 mV

100 mV

150 mV

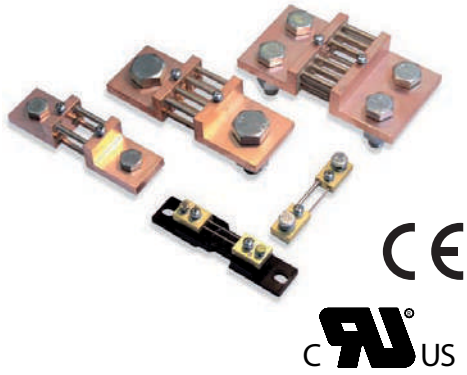

- Extension of d.c. current measuring ranges of moving-coil ammeters.
- Accuracy class 0.5.
- Shunts of 1...25 A ranges (and on request, B2 40...150 A) are fixed on an isolating base.
- The isolating base is adapted to be assembled on a 35 mm DIN rail.
- On request, additional chemical coating are available: lackering, silver or nickel plating.

Example of application

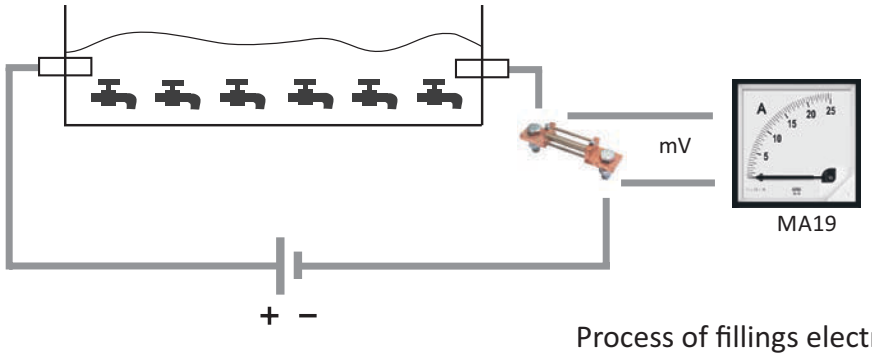

Process of fillings electroplating.

Kind of version

Version A (on an isolating base)

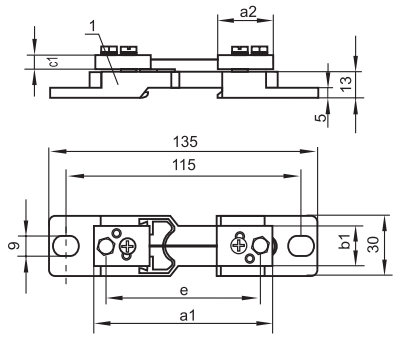

Version D

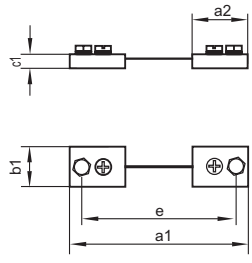

Version B

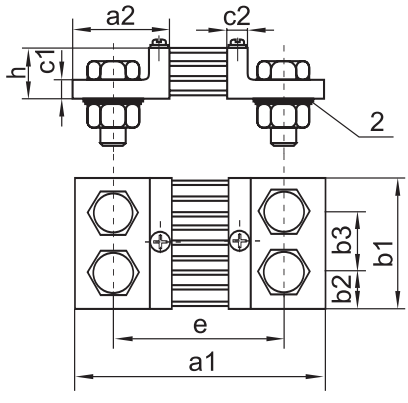

Version C

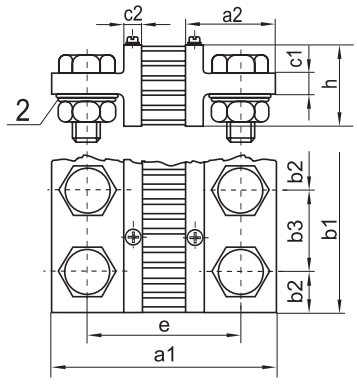

Fig.1. Fixing dimensions of shunts
1 - isolating base, 2 - round spring washer.

Sifam Tinsley Instrumentation Ltd.
Central Buildings, Woodland Close,
Old Woods Trading Estate,
Torquay, Devon, England, TQ27BB
Web: www.sifamtinsley.com/uk
Contact No. : +44 (0) 1803 615139

Sifam Tinsley Instrumentation Inc.
3105, Creekside Village Drive,
Suite No. 801, Kennesaw,
Georgia 30144 (USA)
E-mail Id : psk@sifamtinsley.com
Web : www.sifamtinsley.com
Contact No. : +1 404 736 4903

B2, B3, B4, B5, B6 Measuring Shunts

B2 60 mV												Current terminals			
IN [A]	Ver-sion	a1	a2	b1	b2	b3	c1	c2	e	h	Weight [kg]	LZ	Bolt	P	N
1; 1.5; 2.5; 4;6; 10; 15; 25	A	90	28	20	-	-	8	-	78	-	0.13	2 x 1	M5 x 12	5.5	-
40, 60, 100,150	A, D	100	33	20	-	-	8	-	80	-	0.13	2 x 1	M8 x 16	8.5	-
250	B	145	55	30	15	-	10	10	105	30	0.60	2 x 1	M12 x 40	13	M12
400	B	145	55	40	20	-	10	10	105	30	0.85	2 x 1	M16 x 45	17	M16
600	B	145	55	40	20	-	10	10	105	30	0.85	2 x 1	M16 x 45	17	M16
1000	B	165	65	60	30	-	10	10	115	30	1.45	2 x 1	M20 x 50	21	M20
1500	B	165	65	90	21	48	10	10	115	30	2.00	2 x 2	M16 x 45	17	M16
2500	B	165	65	120	30	60	10	10	115	30	2.90	2 x 2	M20 x 50	21	M20
4000	C	165	65	120	30	60	15	10	115	60	4.30	2 x 2	M20 x 60	21	M20
6000	C	175	70	154	25	52	25	15	125	130	10.50	2 x 3	M20 x 75	21	M20
10000	C	185	75	206	25	52	30	20	135	170	21.00	2 x 4	M20 x 80	21	M20
15000	C	185	75	310	25	52	30	20	135	170	32.00	2 x 6	M20 x 80	21	M20



B2

B3 150 mV												Current terminals			
IN [A]	Ver-sion	a1	a2	b1	b2	b3	c1	c2	e	h	Weight [kg]	LZ	Bolt	P	N
1; 1.5; 2.5; 4; 6; 10; 15; 25	A	90	28	20	-	-	8	-	78	-	0.14	2 x 1	M5 x 12	5.5	-
40, 60, 100,150	D	225	33	25	-	-	8	-	205	-	0.23	2 x 1	M8 x 16	8.5	-
250	B	270	55	30	15	-	10	10	230	50	0.68	2 x 1	M12 x 40	13	M12
400	B	270	55	40	20	-	10	10	230	50	1.05	2 x 1	M16 x 45	17	M16
600	B	270	55	40	20	-	10	10	230	50	1.16	2 x 1	M16 x 45	17	M16
1000	B	290	65	70	35	-	10	10	240	60	2.15	2 x 1	M20 x 50	21	M20
1500	C	290	65	90	21	48	15	10	240	60	3.10	2 x 2	M16 x 60	17	M16
2500	C	290	65	120	30	60	15	10	240	60	5.20	2 x 2	M20 x 60	21	M20
4000	C	300	70	120	30	60	25	15	250	130	8.30	2 x 2	M20 x 75	21	M20
6000	C	300	70	154	25	52	25	15	250	130	15.00	2 x 3	M20 x 75	21	M20
10000	C	310	75	206	25	52	30	20	260	170	28.00	2 x 4	M20 x 80	21	M20
15000	C	310	75	310	25	52	30	20	260	170	35.00	2 x 6	M20 x 80	21	M20

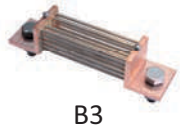

B3

B4 50 mV												Current terminals			
IN [A]	Ver-sion	a1	a2	b1	b2	b3	c1	c2	e	h	Masa [kg]	LZ	Bolt	P	N
1; 1.5; 2.5; 4; 6;10; 15; 25	A	90	28	20	-	-	8	-	78	-	0.13	2 x 1	M5 x 12	5.5	-
40, 60, 100,150	D	100	33	20	-	-	8	-	80	-	0.13	2 x 1	M8 x 16	8.5	-
250	B	138	55	30	15	-	10	10	98	30	0.60	2 x 1	M12 x 40	13	M12
400	B	138	55	40	20	-	10	10	98	30	0.85	2 x 1	M16 x 45	17	M16
600	B	138	55	40	20	-	10	10	98	30	0.85	2 x 1	M16 x 45	17	M16
1000	B	158	65	60	30	-	10	10	108	30	1.45	2 x 1	M20 x 50	21	M20
1500	B	158	65	90	21	48	10	10	108	30	2.00	2 x 2	M16 x 45	17	M16
2500	B	158	65	120	30	60	10	10	108	30	2.90	2 x 2	M20 x 50	21	M20
4000	C	158	65	120	30	60	15	10	108	60	4.30	2 x 2	M20 x 60	21	M20
6000	C	168	70	154	25	52	25	15	118	130	10.50	2 x 3	M20 x 75	21	M20
10000	C	178	75	206	25	52	30	20	128	170	21.00	2 x 4	M20 x 80	21	M20
15000	C	178	75	310	25	52	30	20	128	170	32.00	2 x 6	M20 x 80	21	M20



B4

Sifam Tinsley Instrumentation Ltd.
Central Buildings, Woodland Close,
Old Woods Trading Estate,
Torquay, Devon, England, TQ27BB
Web: www.sifamtinsley.com/uk
Contact No. : +44 (0) 1803 615139

Sifam Tinsley Instrumentation Inc.
3105, Creekside Village Drive,
Suite No. 801, Kennesaw,
Georgia 30144 (USA)
E-mail Id : psk@sifamtinsley.com
Web : www.sifamtinsley.com
Contact No. : +1 404 736 4903

B2, B3, B4, B5, B6 Measuring Shunts

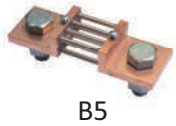

B5

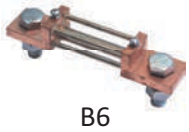

B6

B5 75 mV												Current terminals			
IN [A]	Ver-sion	a1	a2	b1	b2	b3	c1	c2	e	h	Weight [kg]	LZ	Bolt	P	N
1; 1.5; 2.5; 4; 6; 10; 15; 25	A	90	28	20	-	-	8	-	78	-	0.14	2 x 1	M5 x 12	5.5	-
40, 60,100,150	D	115	33	25	-	-	8	-	95	-	0.17	2 x 1	M8 x 16	8.5	-
250	B	160	55	30	15	-	10	10	120	30	0.63	2 x 1	M12 x 40	13	M12
400	B	160	55	40	20	-	10	10	120	30	0.92	2 x 1	M16 x 45	17	M16
600	B	160	55	40	20	-	10	10	120	30	1.00	2 x 1	M16 x 45	17	M16
1000	B	180	65	60	30	-	10	10	130	30	1.75	2 x 1	M20 x 50	21	M20
1500	B	180	65	120	30	60	10	10	130	30	2.30	2 x 2	M16 x 45	17	M16
2500	C	180	65	120	30	60	15	10	130	60	3.10	2 x 2	M20 x 60	21	M20
4000	C	190	70	120	30	60	25	15	140	130	5.20	2 x 2	M20 x 75	21	M20
6000	C	190	70	154	25	52	25	15	140	130	11.20	2 x 3	M20 x 75	21	M20
10000	C	200	75	206	25	52	30	20	150	170	22.00	2 x 4	M20 x 80	21	M20
15000	C	200	75	310	25	52	30	20	150	170	33.00	2 x 6	M20 x 80	21	M20

B6 100 mV												Current terminals			
IN [A]	Ver-sion	a1	a2	b1	b2	b3	c1	c2	e	h	Weight [kg]	LZ	Bolt	P	N
1; 1.5; 2.5; 4; 6; 10, 15; 25	A	90	28	20	-	-	8	-	78	-	0.14	2 x 1	M5 x 12	5.5	-
40, 60, 100, 150	D	145	33	25	-	-	8	-	125	-	0.20	2 x 1	M8 x 16	8.5	-
250	B	190	55	30	15	-	10	10	150	30	0.65	2 x 1	M12 x 40	13	M12
400	B	190	55	40	20	-	10	10	150	30	1.00	2 x 1	M16 x 45	17	M16
600	B	190	55	40	20	-	10	10	150	30	1.11	2 x 1	M16 x 45	17	M16
1000	B	210	65	60	30	-	10	10	160	30	2.00	2 x 1	M20 x 50	21	M20
1500	B	210	65	120	30	60	10	10	160	30	2.50	2 x 2	M16 x 45	17	M16
2500	C	210	65	120	30	60	15	10	160	60	3.20	2 x 2	M20 x 60	21	M20
4000	C	220	70	120	30	60	25	15	170	130	5.80	2 x 2	M20 x 75	21	M20
6000	C	220	70	154	25	52	25	15	170	130	12.00	2 x 3	M20 x 75	21	M20
10000	C	230	75	206	25	52	30	20	180	170	23.00	2 x 4	M20 x 80	21	M20
15000	C	230	75	310	25	52	30	20	180	170	34.00	2 x 6	M20 x 80	210	M20

IN - rated current
LZ - number of terminals
Bolt - hexagon bolt
P – washer
N – nut
Voltage terminals – two M5 x 8 cylinder-head bolts with a cruciform cavity + 5.5 washers + 5.1 spring washers

Technical data

Electromagnetic compatibility	noise immunity	acc. to EN 61000-6-2
	noise emissions	acc. to EN 61000-6-4
Accuracy class	0.5	
Shunt calibrat ion	B2, B4, B5, B6 of 1 .. 10 A ranges	considering the 10 mA current of the meter measuring element
	B3 of 1 .. 10 A ranges	considering the 10 mA current of the meter measuring element
Shunts dimensions	acc. to DIN 43 703 standard	
Test ing voltage of shunts with an isolat ing base	5 kV	
Resistance of a pair of wires connec-t ing the shunt to the meter	35 m or 75 , wires are not delivered with the shunt	

Sifam Tinsley Instrumentation Ltd.
Central Buildings, Woodland Close,
Old Woods Trading Estate,
Torquay, Devon, England, TQ27BB
Web: www.sifamtinsley.com/uk
Contact No. : +44 (0) 1803 615139

Sifam Tinsley Instrumentation Inc.
3105, Creekside Village Drive,
Suite No. 801, Kennesaw,
Georgia 30144 (USA)
E-mail Id : psk@sifamtinsley.com
Web : www.sifamtinsley.com
Contact No. : +1 404 736 4903

B2, B3, B4, B5, B6 Measuring Shunts

Ordering

Shunt-	XX XXX	XXXXX	X	X	XX	X	X
Voltage drop:							
60 mV	B2 060						
150 mV	B3 150						
50 mV	B4 050						
75 mV	B5 075						
100 mV	B6 100						
Measuring range and version:							
range designat ion acc. to the Table 1		XXXXX					
External coat ing:							
standard			0				
tropical			T				
Fixing bolts:							
without bolts				0			
with bolts				1			
Version:							
standard					00		
custom-made acc. to the Table 2 or aft er agreeing with the manufacturer					XX		
Language version:							
Polish						P	
English						E	
Acceptance tests:							
without extra quality inspect ion requirements							0
with an extra quality inspect ion cert if icate							1
with a checking cert if icate							2

Table 1

Measuring range	Coding for B2	Coding for B3	Coding for B4	Coding for B5 and B6
1 A	1A00A	1A00A	1A00A	1A00A
1.5 A	1A50A	1A50A	1A50A	1A50A
2.5 A	2A50A	2A50A	2A50A	2A50A
4 A	4A00A	4A00A	4A00A	4A00A
6 A	6A00A	6A00A	6A00A	6A00A
10 A	10A0A	10A0A	10A0A	10A0A
15 A	15A0A	15A0A	15A0A	15A0A
25 A	25A0A	25A0A	25A0A	25A0A
40 A	40AOD or 40A0A	40AOD	40AOD	40AOD
60 A	60A0D or 60A0A	60A0D	60A0D	60A0D
100 A	100AD or 100AA	100AD	100AD	100AD
150 A	150AD or 150AA	150AD	150AD	150AD
250 A	250AB	250AB	250AB	250AB
400 A	400AB	400AB	400AB	400AB
600 A	600AB	600AB	600AB	600AB
1000 A	1k00B	1k00B	1k00B	1k00B
1500 A	1k50B	1k50B	1k50B	1k50B
2500 A	2k50B	2k50B	2k50B	2k50B
4000 A	4k00C	4k00C	4k00C	4k00C
6000 A	6k00C	6k00C	6k00C	6k00C
10000 A	10k0C	10k0C	10k0C	10k0C
15000 A	15k0C	15k0C	15k0C	15k0C

Table 2

Version	B2 and B4	B5 and B6	B3
On the base of 25 A	A1	A1	A1
On the base of 150 A	A2	A2	A2
On the base of 250 A	B1	B1	B1
On the base of 400 A	B2	B2	B2
On the base of 600 A	B3	B3	B3
On the base of 1000 A	B4	B4	B4
On the base of 1500 A	B5	B5	C1
On the base of 2500 A	B6	C1	C2
On the base of 4000 A	C1		C3
On the base of 6000 A	C2	C3	C4
On the base of 10000 A	C3	C4	C5
On the base of 15000 A	C4	C5	C6

Example of order:

The ordering code: **B2 060-1A00A-0-1-00-E-1** means:

- **B2 060** - shunt B2 with voltage drop 60 mV
- **1A00A** - measuring range: 1 A, version on an isolat ing base
- **0** - standard external coat ing
- **1** - with f ixing bolts
- **00** - standard version
- **E** - English language version
- **1** - with an extra quality inspect ion cert if icate.

See Also



Moving - coil meters of MA series.



Digital meters N24, N25.



Measuring transducers of P20 series.



For more information about SIFAM's products please visit our website www.sifamtinsley.com/uk

Sifam Tinsley Instrumentation Ltd.
Central Buildings, Woodland Close, Old Woods Trading Estate, Torquay, Devon, England, TQ27BB
Web: www.sifamtinsley.com/uk
Contact No. : +44 (0) 1803 615139

Sifam Tinsley Instrumentation Inc.
3105, Creekside Village Drive, Suite No. 801, Kennesaw, Georgia 30144 (USA)
E-mail Id : psk@sifamtinsley.com
Web : www.sifamtinsley.com
Contact No. : +1 404 736 4903