EBC002

Splitter box

ZDO4H055MSS0000-00STAK120MSS

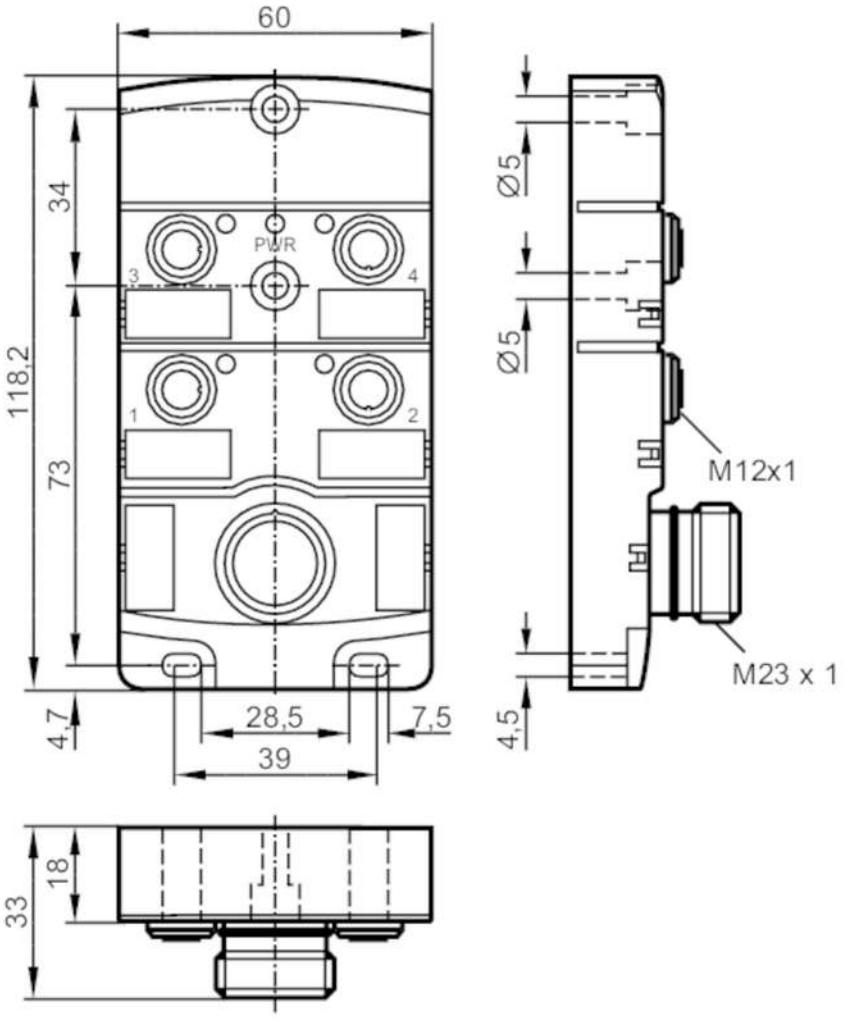

Application		
Special feature		Free from silicone; Gold-plated contacts
Free from silicone		yes
Electrical data		
Operating voltage	[V]	10...30 DC; ("supply class 2" to cULus)
Max. current load per module/slot	[A]	4
Max. current load total	[A]	10
Outputs		
Electrical design		PNP

EBC002

Splitter box

ZDO4H055MSS0000-00STAK120MSS

Operating conditions			
Ambient temperature	[°C]	-25...80	
Protection		IP 67	
Tests / approvals			
UL approval		Enclosure type	Type 1
Mechanical data			
Weight	[g]	224.5	
Dimensions	[mm]	33 x 60 x 118.2	
Materials		PA	
Moulded-body material		PA	
Number of ports splitter box		4	
Connector type		M12	
Displays / operating elements			
Display		switching status	4 x LED, yellow
		operation	1 x LED, green
Accessories			
Items supplied		Protective caps: 2	
		labels: 4	
Remarks			
Pack quantity		1 pcs.	

Electrical connection - Connection

Connector: 1 x M23; Moulded body: PA; Contacts: gold-plated; Tightening torque: 0.8...1.5 Nm

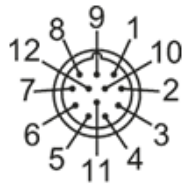

EBC002

Splitter box

ZDO4H055MSS0000-00STAK120MSS

Connection

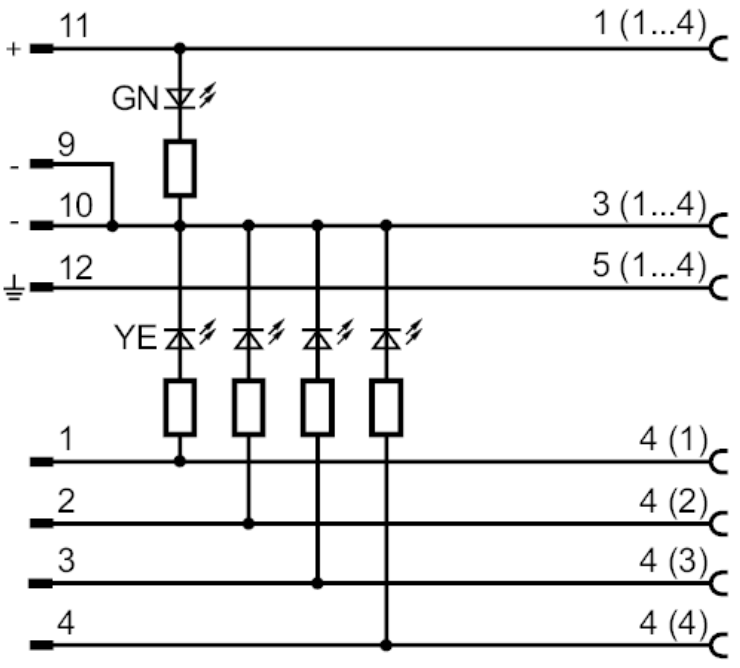

Electrical connection - slot

Connector: 4 x M12; coding: A; Moulded body: PA; Contacts: gold-plated; Tightening torque: 0.8...1.5 Nm

