Product data sheet
Characteristics

XCKML115H29
limit switch XCKML - thermoplastic roller lever - 2x(1NC+1NO) - snap - M20



Main

Range of product	OsiSense XC
Series name	Standard format
Product or component type	Limit switch
Device short name	XCKML
Body type	Fixed
Head type	Rotary head
Material	Metal
Body material	Zamak
Fixing mode	By the body
Movement of operating head	Rotary
Type of operator	Spring return roller lever thermoplastic
Type of approach	Lateral approach 2 directions
Cable entry	3 entries tapped for M20 x 1.5 cable gland, cable outer diameter: 7...13 mm
Number of poles	4
Contacts type and composition	2 x (1 NC + 1 NO)
Contact operation	Snap action

Complementary

Switch actuation	By 30° cam
Electrical connection	Screw-clamp terminals, clamping capacity: 1 x 0.34...2 x 1.5 mm²
Contacts insulation form	Zb
Number of steps	1
Positive opening	With
Positive opening minimum torque	0.5 N.m
Minimum torque for tripping	0.2 N.m
Minimum actuation speed	0.01 m/min
Maximum actuation speed	1.5 m/s

Disclaimer: This documentation is not intended as a substitute for and is not to be used for determining suitability or reliability of these products for specific user applications

[Ithe] conventional enclosed thermal current	10 A AC
[Ui] rated insulation voltage	300 V conforming to CSA C22.2 No 14 500 V degree of pollution 3 conforming to IEC 60947-1 300 V conforming to UL 508
Resistance across terminals	<= 25 MOhm conforming to IEC 60255-7 category 3
[Uimp] rated impulse withstand voltage	6 kV conforming to IEC 60664 6 kV conforming to IEC 60947-1
Electrical durability	5000000 cycles, DC-13, inductive load type, 120 V, 4 W, operating rate: <= 60 cyc/mn, load factor: 0.5 conforming to IEC 60947-5-1 appendix C 5000000 cycles, DC-13, inductive load type, 24 V, 7 W, operating rate: <= 60 cyc/mn, load factor: 0.5 conforming to IEC 60947-5-1 appendix C 5000000 cycles, DC-13, inductive load type, 48 V, 10 W, operating rate: <= 60 cyc/mn, load factor: 0.5 conforming to IEC 60947-5-1 appendix C
Mechanical durability	3000000 cycles
Width	77 mm
Height	81 mm
Depth	36 mm
Product weight	0.43 kg
Terminals description ISO n°1	(13-14)NO (21-22)NC

Environment

Shock resistance	50 gn (duration = 11 ms) conforming to EN/IEC 60068-2-27
Vibration resistance	25 gn (f = 10...500 Hz) conforming to EN/IEC 60068-2-6
IP degree of protection	IP66 conforming to EN/IEC 60529
IK degree of protection	IK05 conforming to EN 50102
Electrical shock protection class	Class I conforming to IEC 61140 Class I conforming to NF C 20-030
Ambient air temperature for operation	-25...70 °C
Ambient air temperature for storage	-40...70 °C
Protective treatment	TC
Product certifications	UL CSA
Standards	CSA C22.2 No 14 IEC 60204-1 IEC 60947-5-1 UL 508 EN 60204-1 EN 60947-5-1

Offer Sustainability

Sustainable offer status	Green Premium product
RoHS (date code: YYWW)	Compliant - since 1618 - Schneider Electric declaration of conformity Schneider Electric declaration of conformity
REACh	Reference not containing SVHC above the threshold Reference not containing SVHC above the threshold
Product end of life instructions	Need no specific recycling operations

Contractual warranty

Warranty period	18 months

Dimensions

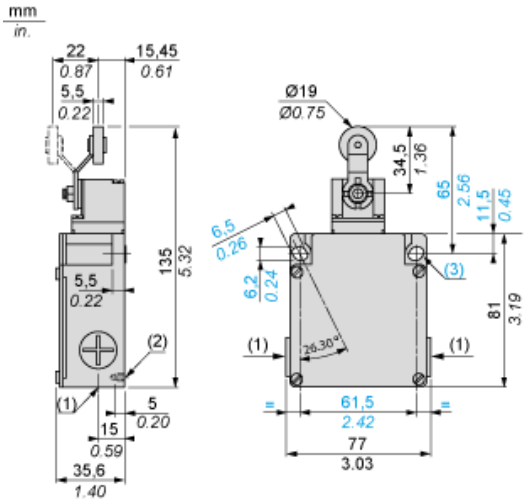

(1) 3 tapped entries M20 x 1.5
(2) 2 centring holes Ø 3.9 ± 0.2, for cover fixing holes alignment.
Ø : 2 elongated holes 6.2 x 6.5, inclined at 26° 30' to the vertical axis, for M5 screws.

Mounting with Cable Entry

Position of Cable Gland

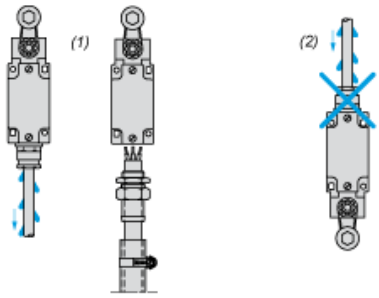

(1) Recommended
(2) To be avoided

Mounting with Rotary Heads and Levers

Type of Cam

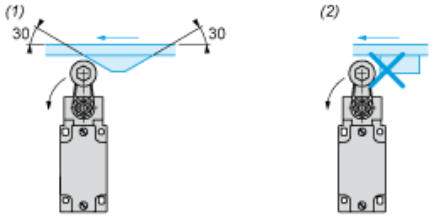

(1) Recommended
(2) To be avoided

Wiring Diagram

2 x 2-pole NC + NO Snap Action

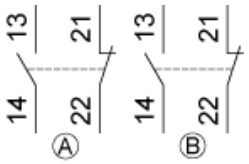

Characteristics of Actuation

Switch Actuation by 30° Cam

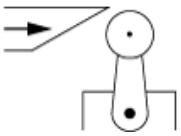

Functionnal Diagram

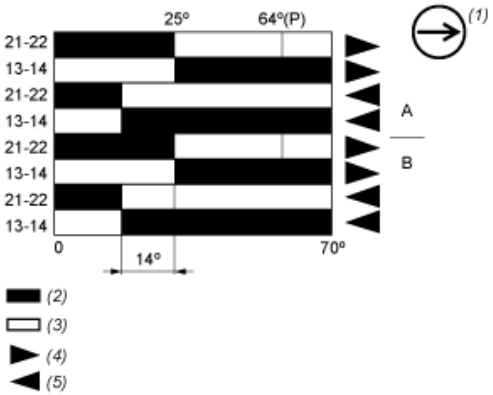

(P) Positive opening point
(1) NC contact with positive opening operation
(2) Closed
(3) Open
(4) Tripping
(5) Resetting