E12436

Connecting cable with plug

ASTGH080MSS0002H08

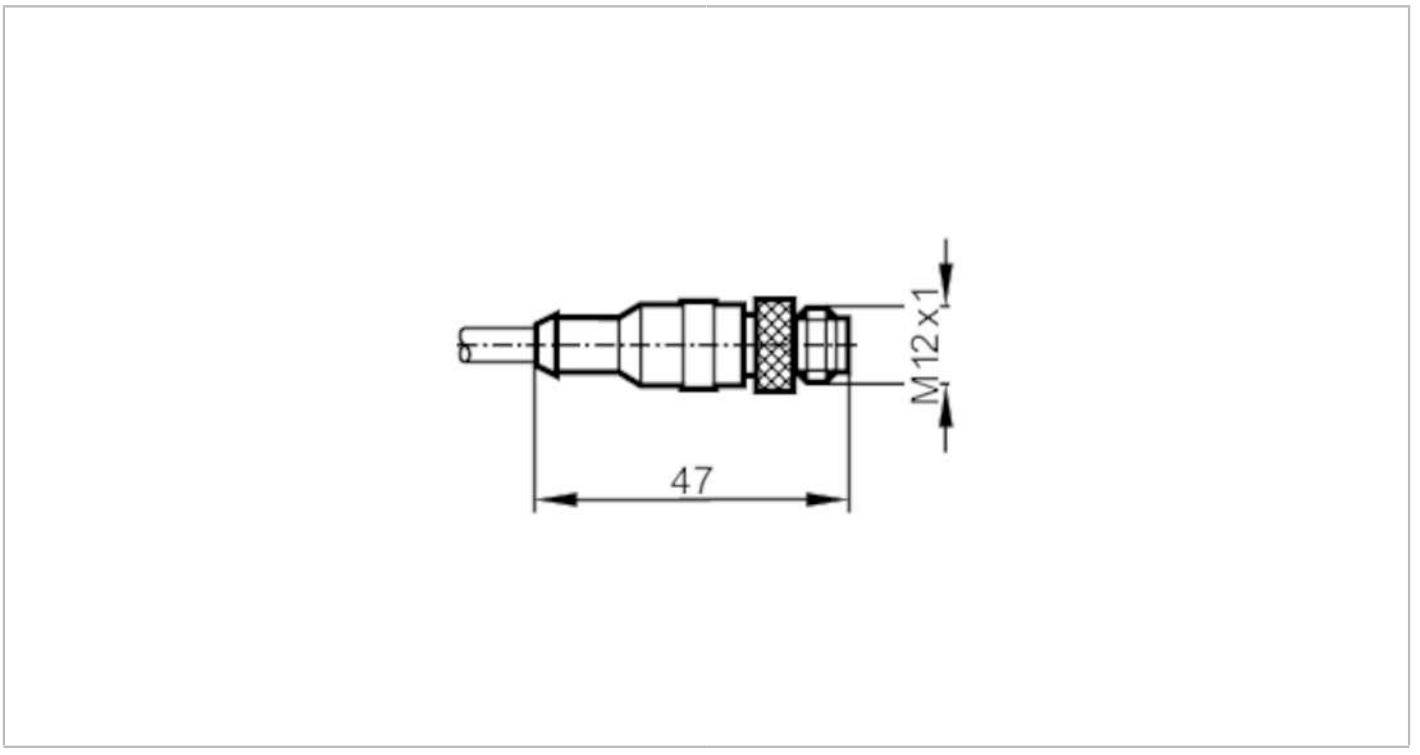

Electrical data		
Operating voltage	[V]	< 30 AC / < 36 DC
Operating conditions		
Ambient temperature	[°C]	-25...80
Protection		IP 67
Mechanical data		
Weight	[g]	133
Materials		PUR
Moulded-body material		PUR
Material nut		brass, nickel-plated
Remarks		
Pack quantity		1 pcs.

Electrical connection

Cable: 2 m, PUR, black, Ø 6.8 mm; 8 x 0.25 mm²

Electrical connection - plug

Connector: 1 x M12, straight; coding: A; Moulded body: PUR; Locking: brass, nickel-plated; Tightening torque: 0.7...0.9 Nm



E12436

Connecting cable with plug

ASTGH080MSS0002H08

Connection

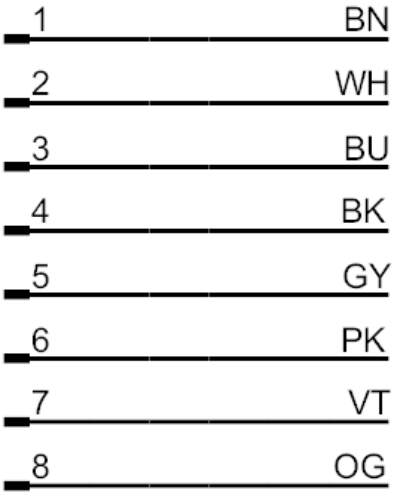

colours to DIN EN 60947-5-2
Core colours :

BK =	black
BN =	brown
BU =	blue
GY =	grey
PK =	pink
OG =	orange
VT =	lilac
WH =	white