NOTES
MATERIAL: -DIECAST ALUMINUM ALLOY. -Six 6-32 Phillips screws

VIEW OF BOX (LID REMOVED)

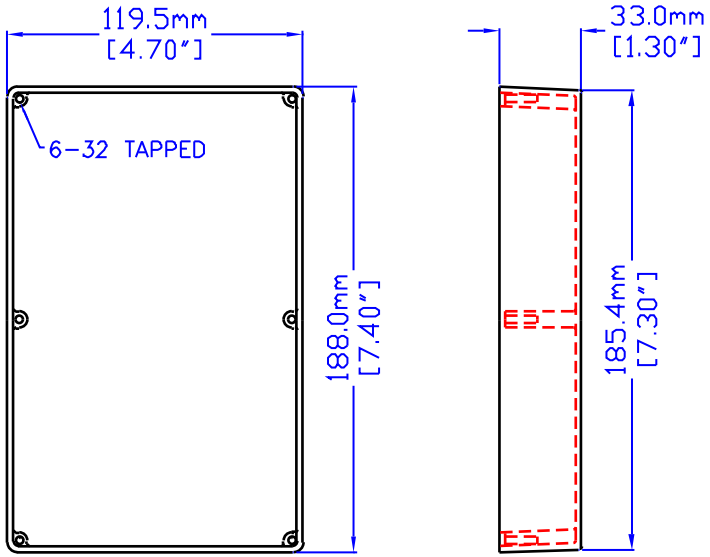

NOTE:
FOR DETAIL
DIMENSIONING
REFFER TO DRAWING
1590DD

VIEW INSIDE LID

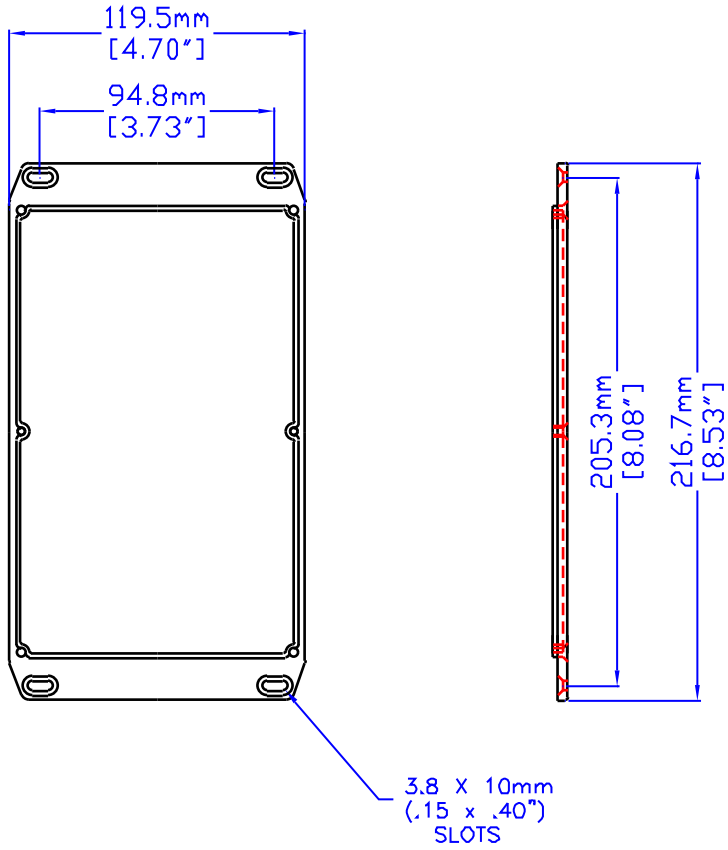

1590DDFL
1590D WITH SPECIAL FLANGED LID.
AVAILABLE FROM STOCK.

WATERPROOFING KIT IS AVAILABLE
PART # 1590DDG.
THE GASKET KIT WILL AFFORD PROTECTION
AGAINST LIQUID TO NEMA 4 AND IP65 LEVELS.

THIS ENCLOUSURE IS ALSO AVIALABLE IN BLACK
AND GRAY TEXTURE FINISH.

HAMMOND MANUFACTURING

1590DDFL

CANADA - PH (519) 886 7170 - FAX (519) 886 8311
U.S.A. - PH (716) 631 5700 - FAX (716) 631 1156