

AN 16

AN inch lock nut, requiring a keyway

AN lock nuts are used to locate bearings onto a shaft or adapter sleeve. They have four, equally spaced slots around their circumference to accommodate a hook or impact spanner. The lock nuts are secured onto the shaft using a W lock washer that engages a keyway in the shaft or adapter sleeve thread. AN lock nuts can be reused, provided they are not damaged.

- Simple, stable and reliable fastening element
- Easy to install and remove
- Reusable with a new locking device
- Require a keyway in the shaft or adaptor sleeve thread

Overview

Dimensions

Bore diameter	79.68 mm
Outside diameter	105.689 mm
Width	15.342 mm

Properties

Associated mounting tool	HN 16
Locking device	Lock washer
Nut for hydraulic mounting	No

Technical Specification

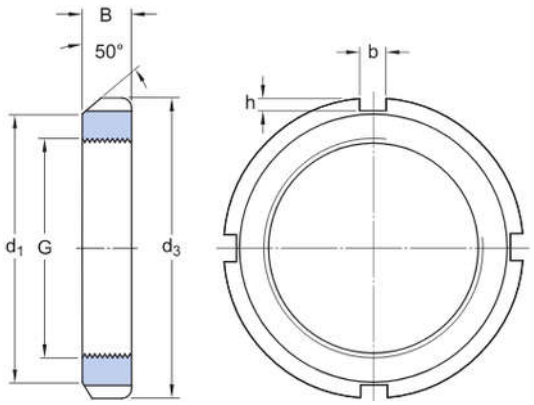

Dimensions

G	79.68 mm	Thread size
	12	Threads per inch
d_1	97.638 mm	Diameter locating side face
d_3	max. 105.689 mm	Outside diameter
B	15.342 mm	Width
b	9.144 mm	Width locating slot
h	3.429 mm	Depth locating slot

Calculation data

Axial load carrying capacity, static	166 kN

Mass

Mass lock nut	0.45 kg

Mounting information

Associated spanner	HN 16

Associated products

Locking device	W 16

Terms and conditions

By accessing and using this website / app owned and published by AB SKF (publ.) (556007-3495 · Gothenburg) ("SKF"), you agree to the following terms and conditions:

Warranty Disclaimer and Limitation of Liability

Although every care has been taken to assure the accuracy of the information on this website / app, SKF provides this information "AS IS" and DISCLAIMS ALL WARRANTIES, EXPRESS OR IMPLIED, INCLUDING, BUT NOT LIMITED TO, IMPLIED WARRANTIES OF MERCHANTABILITY AND FITNESS FOR A PARTICULAR PURPOSE. You acknowledge that your use of this website / app is at your sole risk, that you assume full responsibility for all costs associated with use of this website / app, and that SKF shall not be liable for any direct, incidental, consequential, or indirect damages of any kind arising out of your access to, or use of the information or software made available on this website / app. Any warranties and representations in this website / app for SKF products or services that you purchase or use will be subject to the agreed upon terms and conditions in the contract for such product or service. Further, for non-SKF websites / apps that are referenced in our website / app or where a hyperlink appears, SKF makes no warranties concerning the accuracy or reliability of the information in these websites / apps and assumes no responsibility for material created or published by third parties contained therein. In addition, SKF does not warrant that this website / app or these other linked websites / apps are free from viruses or other harmful elements.

Copyright

Copyright in this website / app copyright of the information and software made available on this website / app rest with SKF or its licensors. All rights are reserved. All licensed material will reference the licensor that has granted SKF the right to use the material. The information and software made available on this website / app may not be reproduced, duplicated, copied, transferred, distributed, stored, modified, downloaded or otherwise exploited for any commercial use without the prior written approval of SKF. However, it may be reproduced, stored and downloaded for use by individuals without prior written approval of SKF. Under no circumstances may this information or software be supplied to third parties.
This website /app includes certain images used under license from Shutterstock, Inc.

Trademarks and Patents

All trademarks, brand names, and corporate logos displayed on the website / app are the property of SKF or its licensors, and may not be used in any way without prior written approval by SKF. All licensed trademarks published on this website / app reference the licensor that has granted SKF the right to use the trademark. Access to this website / app does not grant to the user any license under any patents owned by or licensed to SKF.

Changes

SKF reserves the right to make changes or additions to this website / app at any time.