MOFLASH SIGNALLING

LEDS100 ECO



Overview

VISUAL SIGNALS - INDUSTRIAL - LED ECO BEACONS

The LEDS100 ECO Series is suitable for light commercial & industrial signalling applications where local indication is required. The range has been designed to offer a cost-effective solution against more traditional incandescent types of lamps, whether through new plant and machinery installations or existing facility upgrades. The design allows for termination inside the enclosure through the base.

The LEDS100 Beacons have two selectable stages of alarm, **Flashing** or **Continuous** (Static) mode, which are selectable via a Jumper Link on the PCB. The design also allows for a third wire connection giving flexibility to switch from a pre-set Static Mode to Flashing. Two M5 mounting studs are also incorporated into the base on 45mm centres.

If you require a different mounting Base option, please refer to our LED100 or LEDD100 Datasheet.
If you require an audible as well as a visual signal, please refer to our LEDA100 Datasheet.

Features

- Continuously rated
- Flashing or Static
- Low current consumption
- Suitable for surface or wall mounting
- Optional wall bracket - See accessories on page 2
- 2 studs fix
- 360° light output around the vertical axis
- Available in 12vAC/DC, 24vAC/DC, 48vAC/DC and 115/230vAC/DC

Material

- UV Stable Polycarbonate Lens
- UV Stable ABS Plastic Base

IP 65

8 SMT LED

160 FPM*

-25 to +55°C

50/60Hz

*Flashes Per Minute

APPROVALS & CONFORMITIES

ISSUE 1

uksales@moflash.co.uk
moflashkm@moflash.com
exportsales@moflash.co.uk
UK +44(0)121 446 5322
FR +33(0)1 70 72 12 71
11 Upper Conybere Street
Highgate, Birmingham
B12 0EB, England
www.moflash.com

MOFLASH SIGNALLING

LEDS100 ECO

Ordering Information

Voltage		Ordering Information			Mode & Current Consumption	
Nominal Voltage	Voltage Range	Amber	Red	Green	Flashing	Static
12vAC/DC	10-17vAC/DC	LEDS100-01-01	LEDS100-01-02	LEDS100-01-04	120mA @12vDC	206mA @12vDC
24vAC/DC	20-30vAC/DC	LEDS100-02-01	LEDS100-02-02	LEDS100-02-04	76mA @24vDC	120mA @24vDC
48vAC/DC	35-85vAC/DC	LEDS100-03-01	LEDS100-03-02	LEDS100-03-04	50mA @48vDC	78mA @48vDC
115-230vAC/DC	85-280vAC/DC	LEDS100-05-01	LEDS100-05-02	LEDS100-05-04	19mA @230vAC	28mA @230vAC

Effective Candela (Cd) - Formula Blondel-Rey		
Amber	Red	Green
7.57	3.58	5.07

Weights & Dimensional Drawings

Kg	12v	24v	48v	230v
Net Weight	0.105	0.105	0.135	0.135
Gross Weight	0.158	0.158	0.188	0.188

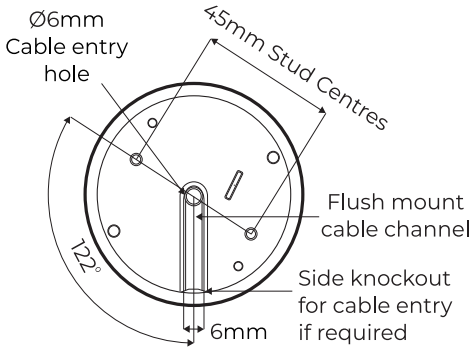

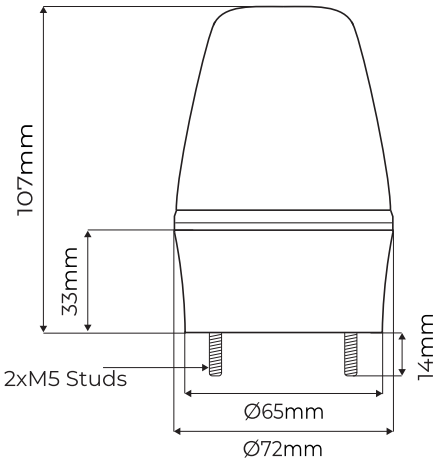

Accessories

Part Code	Description
50003	Cage Guard - Suitable for use with the 100 & 125 Series Beacon range **(Cannot be fitted with Wall Bracket).**
50007	Angled Wall Bracket - Suitable for use with the 100 & 125 Series Beacon range **(Cannot be fitted with Cage guard).**
50045-SK	Amber Lens - Suitable for use with the 100 Series Beacon range.
50046-SK	Red Lens - Suitable for use with the 100 Series Beacon range.
50048-SK	Green Lens - Suitable for use with the 100 Series Beacon range.


50003


50007


50045-SK


50046-SK


50048-SK

uksales@moflash.co.uk
moflashkm@moflash.com
exportsales@moflash.co.uk
UK +44(0)121 446 5322
FR +33(0)1 70 72 12 71
11 Upper Conybere Street
Highgate, Birmingham
B12 0EB, England
www.moflash.com

APPROVALS & CONFORMITIES

UKCA CE RoHS