Operating instructions

Solenoid Metering Pump

DULCOWALL and DULCOWALL Advanced



Please read carefully these operating instruction before use. Do not discard. The operator shall be liable for any damage caused by installation or operating errors. The latest version of the operating instruction is available on our homepage.

Table of Contents

User Information 3
Safety Chapter 3
1 Product Description 10
1.1 Functions 10
1.2 Technical Data 10
1.2.1 General Data 10
1.2.2 Identity code for solenoid driven dosing pump DULCOWALL 11
1.2.3 Capacity Data 13
1.2.4 Installation Dimensions 13
1.2.5 Material in contact with medium 14
1.2.6 Temperatures 14
1.2.7 Climate/Humidity 14
1.2.8 Sound pressure level 14
1.3 DULCOWALL Overview/Control 15
2. Installation 17
2.1 Pump Installation 20
2.2 Hose Line Installation 21
2.3 Installation of Bypass Bleed Line 22
3 Operation, Wiring and Setting 23
3.1 Setting manual mode 23
3.2 Setting and wiring external mode 24
3.2.1 Wiring level switch (DULCOWALL Advanced) 25
3.2.2 Wiring relay and analogue (DULCOWALL Advanced) 26
3.2.3 Setting operation modes for DULCOWALL Advanced 27
3.2.4 Timer setting for DULCOWALL Advanced 29
3.2.5 Service setting for DULCOWALL Advanced 29
3.2.6 Menu DULCOWALL Advanced 30
4. Maintenance and Repairs 33
4.1 Maintenance 34
4.2 Replacing the Metering Diaphragm 35
5. Troubleshooting 37
6 Spare Parts 39
7 Storage and Transport 40
8. Decommissioning 40
9 Appendix 41
9.1 Declaration of power supply voltage 41
9.2 EC/EU Declaration of Conformity 42

User Information

Thank you for having selected PROMINENT solenoid metering pumps. This manual will help you in handling, operating and troubleshooting for the pump. Please read this manual through before you handle the pump, to ensure it is operated safely and reliably.
Please familiarize yourself with the following designations and symbols:

Supplementary Information



Fig. 1: Please read!

General user instructions
These operating instructions are only intended for skilled users responsible for the operating of oscillating metering pumps

Read the following supplementary information in it entirely! Should you already know this information you will benefit more from referring to the operating instructions.
The following are highlighted separately in the document:

- Enumerated lists

⇨ Outcome of the instructions

Information



This provides important information relating to the correct operation of the unit or is intended to make your work easier

Safety notes

Safety notes are identified by pictograms - see “Safety Chapter”.

Validity

These operating instructions conform to current EU regulations applicable at the time of publication.

Safety Chapter

Explanation of the safety information

The following signal words are used in these operating instructions to identify different severities of hazard:

Signal word	Meaning
WARING	Denotes a possibly hazardous situation. If this is disregarded, you are in a life threatening situation and this can result in serious injuries.
CAUTION	Denotes a possibly hazardous situation. If this is disregarded, it could result in slight or major injuries or material damage.

Warning signs denoting types of danger

The following warning signs are used in these operating instructions to denote different types of danger.

Warning signs	Type of danger
	Warning - automatic start-up
	Warning - high-voltage
	Warning - danger zone

Intended use

- Only use the pump to meter liquid feed chemicals.
- Only use the pump once it has been correctly installed and started up in accordance wit the technical data and specifications contained in the operating instructions.
- Observe the general limitations with regard to viscosity limits, chemical resistance and density - see also the ProMinent Resistance List in the Product Catalogue or at www.prominent.com.
- All other uses or modifications are prohibited.
- The pump is not designed to meter gaseous media and solids.
- The pump is not intended to meter flammable media without appropriate protective measures having been put in place.
- The pump is not designed to meter explosive media.
- The pump is not suitable for operation in areas at risk from explosion.
- The pump is not designed for use outdoors, without appropriate protective measures.
- Only allow the pump to be operated by trained and authorised personnel, see the following "Qualifications" table.
- You have a duty to observe the information contained in the operating instructions during the different phases of the unit's service life.

Safety notes



WARNING

Warning about personal and material damage

The pump can start to pump, as soon as it is connected to mains Voltage.

-Install an emergency cut-off switch in the pump power supply line or integrate the pump in the emergency cut-off management of the system.



WARNING

Danger of electric shock

If there is a damaged housing or an opening is left open, the mains voltage inside is no longer sufficiently shielded.

-Disconnect the pump from the mains power supply if the housing is damaged or there is a gaping opening.



WARNING

Danger from hazardous substances!

Possible consequence: fatal or very serious injuries.

Pleases ensure when handling hazardous substances that you have read the latest safety data sheets provided by the manufacture of the hazardous substance. The actions required are described in the safety data sheet. Check the safety data sheet regularly and replace if necessary, as the hazard potential of a substance can be re-evaluate at any time based on new finding.

The system operator is responsible for ensuring that these safety data sheets are available that they are kept up to date, as well as for producing an associated hazard assessment for the work stations affected.



WARNING

Warning of feed chemical spraying around

Feed chemical can spray out of the hydraulic components if they are manipulated or opened due to pressure in the liquid end and adjacent parts of the system.

-Disconnect the pump from the mains power supply and ensure that it cannot be switched on again by unauthorized persons.

-Depressurize the system before commencing any work on hydraulic parts.



CAUTION!

Warning of feed chemical spraying around

The metering pump can generate a multiple of its rated pressure. Hydraulic parts may burst if a discharge line is blocked.

-Correctly install a back pressure valve in the discharge line behind the metering pump.



CAUTION!

Warning of excessive demand

The pump can meter too much if there is negative pressure difference between the discharge and suction sides.

-For example with a free outlet, use a back pressure valve with a minimum opening pressure of 1.5 bar (not possible with type 02).



CAUTION!

Danger of injury to personnel and material damage

The use of untested third party components can result in injury to personnel and material damage.

-Only fit parts to metering pumps that have been tested and recommended by ProMinent.



CAUTION!

Warning against illegal operation.

Observe the regulations that apply where the unit is installed.

Information in the event of an emergency

In an emergency, either pull out the mains plug, or press the Emergency Stop Switch installed on the customer's side or disconnect the pump from the mains power supply in line with the emergency shut-down management guidelines for your system!

If feed chemical escapes, additionally ensure that the hydraulic system around the pump is at atmospheric pressure. Adhere to the safety data sheet for the feed chemical.



CAUTION!

Danger of electric shock

Arrange grounding!

This pump is supplied with a grounding conductor and grounding-type attachment plug. To reduce the risk of electric shock, be certain that it is connected only to a properly grounding-type socket



CAUTION!

Danger of injury to personnel

Wear protective clothing

Always wear protective clothing (goggles and gloves, etc.) when handling hazardous or unknown chemicals!



CAUTION!

Danger of injury to personnel

Ventilate

Dosing toxic or odorous media may result poisonings. Ensure the operating site with good ventilation.



CAUTION!

Danger of injury to personnel and material damage

Follow the instruction manual.

Replace the wear parts according to the description in the instruction manual. Do not disassemble any part which is not regarded as wear parts in the spare parts



WARNING!

Warning about personnel and material damage

Limited operation site and storage

Do not install or store the pump in the following places:

Places where a flammable gas or material is used or stored.

Places where the ambient temperature is extremely high(45℃ or higher) or extremely low(-10℃ or lower)



DANGER!

Danger from hazardous substances

Possible consequence: fatal or very serious injuries.

When handling hazardous substances, ensure that you have read the latest material safety data sheets provided by the manufacturer of the hazardous substances. The measures required are described in the material safety data sheet. Check the material safety data sheet regularly and replace, if necessary, as the hazard potential of a substance can be re-evaluated at any time based on new findings.

The system operator is responsible for ensuring that the material safety data sheets are available and that they are kept up to date, as well as for producing an associated hazard assessment for the workplaces affected.



WARNING!

Feed chemical spraying around due to improper Installation

The pipes can come loose or rupture if they are not installed correctly.

- Route all hose lines so that they are free from mechanical stresses and kinks.
- Only use original hoses with the specified hose dimensions and wall thicknesses.
- Only use clamp rings and hose sleeves intended for the respective hose diameter to ensure the long service life of the connections.

Feed chemical spraying around due to pressure in the liquid end and adjacent system components

Feed chemical may spray out of the hydraulic components if they are tampered with or opened.

- Disconnect the pump from the mains/power supply and ensure that it cannot be switched on again by unauthorised persons.
- Ensure that the system is at atmospheric pressure before commencing any work on hydraulic parts of the system.
- Correlate the selected dosing head with the chemical resistance list.

1 Product Description

1.1 Functions

The DULCOWALL pump is a microprocessor-controlled short-stroke solenoid-operated diaphragm-type metering pump for metering liquid, non-combustible media. Metering is based on a pulsating action. For each pulse coming from the electronic control, the solenoid energizes and completes a stroke. The diaphragm, stabilized by a steel core, displaces the medium in the liquid end, the balls on the intake side are pressed against their seat while the balls on the delivery side open, thus releasing the medium for metering. The solenoid is deactivated on completion of the stroke and returned to its initial position by a spring. In so doing, the valve on the delivery end closes while the valve on the intake side opens so as to draw medium into the liquid end. The safety diaphragm protects the lead through in the housing from dust and moisture.

The solenoid-operated, diaphragm-type metering pump covers a capacity range from approx. 0.7 l/h to 23 l/h (liter specifications at max. stroke length and max. stroke rate) at a max. back pressure of 16 bar to 1,5 bar. The delivery capacity can be adjusted via buttons depending on the number of strokes. The various operating statuses are indicated by an LED for operation and empty/fault signal or by the colored display. The pump features a connection facility for a two-stage level switch

1.2 Technical Data

1.2.1 General Data

Version	**Fixed voltage**
Power supply	1ph. 100 - 230V±10%,50/60Hz
Power rating, approx	6-18W
Current	0.1…0.25A
Fuse	2.0AT
External control -contact	Voltage with open contacts or lower than DC5V, 5mA
	Minimum pulse duration is 20ms
	Max. pulse frequency is 5 pulse/s
External control –analog	4—20mA
Protection class	IP65
Ambient temperature in operation	-10…+45℃
Metering deviations	All material versions -10%...+15%
Metering reproducibility	±2% (under constant conditions)

1.2.2 Identity code for solenoid driven dosing pump DULCOWALL

DLWa	Pump model example: DLWa0803PV2000U0			
	Digit 1 & 2 = backpressure (bar), Digits 3 & 4 = pumps´s capacity (l/h)			
	1600	1601	1602	1603
	1001	1002	1003	
	0703	0803	0806	
	0306	0308	0313	
	0212	0215	0223	

	Dosing head / Sealing gaskets material	
	PV2	PVDF / PTFE; With deaerator
	PV7	PVDF / PTFE; Self-bleeding without bypass

	Valve spring	
	0	Without valve spring
	1	With valve spring

	Version	
	0	DULCOWALL (without display)
	A	DULCOWALL Advanced

	Color	
	0	Housing RAL5003 - Hood RAL5003 (standard color)
	1	Housing RAL5003 - Hood RAL2003
	2	Housing RAL7016 - Hood RAL7016

	Electrical connection	
	U	1ph. 100 - 230 V, 50/60 Hz, 2m power cable, European plug

	Accessories	
	0	Without 1/2" injection and foot valve, 2m PVC suction hose, 5m PE discharge hose, two-stage
	1	With 1/2" injection and foot valve, 2m PVC suction hose, 5m PE discharge hose, two-stage limit switch

Pump type DULCOWALL	Material number
DLWA1600PV2000U1	1140315
DLWA1601PV2000U1	1140316
DLWA1602PV2000U1	1140317
DLWA1001PV2000U1	1140318
DLWA1002PV2000U1	1140319
DLWA1003PV2000U1	1140320
DLWA0703PV2000U1	1140321
DLWA0803PV2000U1	1140322
DLWA0806PV2000U1	1140323
DLWA0306PV2000U1	1140324
DLWA0308PV2000U1	1140325
DLWA0313PV2000U1	1140326
DLWA0212PV2000U1	1140327
DLWA0215PV2000U1	1140328
DLWA0223PV2000U1	1140329

Pump type DULCOWALL Advanced	Material number
DLWA1600PV20A0U1	1140406
DLWA1601PV20A0U1	1140407
DLWA1602PV20A0U1	1140408
DLWA1001PV20A0U1	1140409
DLWA1002PV20A0U1	1140410
DLWA1003PV20A0U1	1140411
DLWA0703PV20A0U1	1140412
DLWA0803PV20A0U1	1140413
DLWA0806PV20A0U1	1140414
DLWA0306PV20A0U1	1140415
DLWA0308PV20A0U1	1140416
DLWA0313PV20A0U1	1140417
DLWA0212PV20A0U1	1140418
DLWA0215PV20A0U1	1140419
DLWA0223PV20A0U1	1140420

1.2.3 Capacity Data

Type	**Pressure** bar	**Max. Capacity** l/h **(PV2)**	**Max. Capacity** l/h **(PV7)**	**Capacity /stroke** ml/ stroke	**Stroke Rate** Strokes/ min	**Connection** mm	**Perm. Admiss. Pressure** bar	**Suction lift** m WS	**Priming lift** m WS*	**Shipping weight** kg
0212	1.5	12	10,8	2.22	90	12x9	0.8	1.5	1.5	2.5
0215	1.5	16.5	14,9	2.29	120	12x9	0.8	1.5	1.5	2.5
0223	1.5	24	21,6	2.22	180	12x9	0.8	1.5	1.5	2.5
0306	3	6.3	5,7	1.166	90	8x5	1.5	3.0	1.5	2.4
0308	3	8.7	7,8	1.208	120	8x5	1.5	3.0	1.5	2.4
0313	3	13.8	12,4	1.27	180	8x5	1.5	3.0	1.5	2.4
0703	7	3.6	3,2	0.66	90	8x5	3	6.0	1.5	2.4
0803	8	4.8	4,3	0.66	120	8x5	3	6.0	1.5	2.4
0806	8	7.2	6,5	0.66	180	8x5	3	6.0	1.5	2.4
1001	10	2.28	2,1	0.42	90	8x5	3	6.0	1.5	2.4
1002	10	3.12	2,8	0.43	120	8x5	3	6.0	1.5	2.4
1003	10	4.68	4,2	0.43	180	8x5	3	6.0	1.5	2.4
1600	16	0.72	0,5	0.2	60	6x4	8	6.0	1.5	2.36
1601	16	1.14	0,8	0.2	90	6x4	8	6.0	1.5	2.36
1602	16	1.44	1,0	0.2	120	6x4	8	6.0	1.5	2.36
1603	16	2.1	1,5	0.2	180	6x4	8	6.0	1.5	2.36

* Priming lift with clean and moist valves. Priming lift at 100% stroke length and free outlet or opened bleed valve.

1.2.4 Installation Dimensions

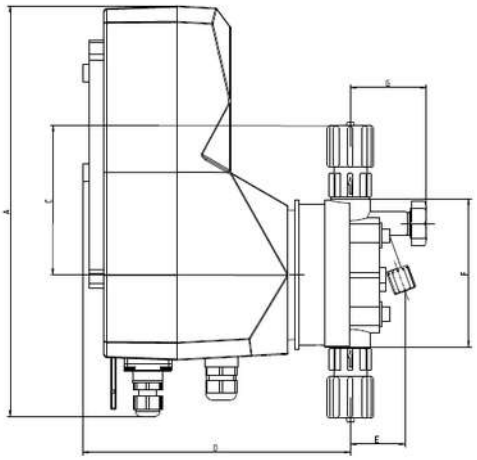

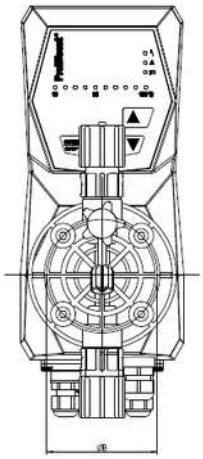

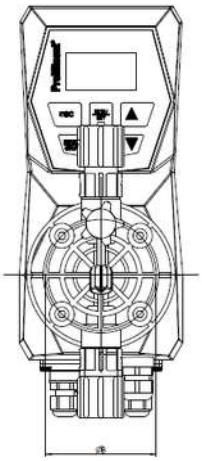

Type	A	B	C	D	E	F	G	H
0212 0215 0223	245	ϕ 70	90	162,5	35	92	45	12x9
0306 0308 0313	245	ϕ 70	90	162,5	36	90	45	8x5
0703 0803 0806	245	ϕ 70	90	162,5	35	90	44	8x5
1001 1002 1003	245	ϕ 70	90	162,5	35	90	44	8x5
1600 1601 1602 1603	245	ϕ 53	81	158,5	33	74	32	6x4

1.2.5 Material in contact with medium

	Liquid end	Suction/discharge connector	Ball seal	Seals	Balls
PVT	PVDF	PE	PTFE	PTFE	Ceramic

1.2.6 Temperatures

Storage and transport temperature	-20- + 60℃
Ambient temperature during operation	-10 - + 45℃

Maximum permissible medium temperature

Dosing head material	Long term at max. back pressure	For max. 15 min at max. 2 bar
PVT	50℃	100℃

1.2.7 Climate/Humidity

Maximum air humidity*	95%relative humidity

*non-condensing

1.2.8 Sound pressure level

Sound pressure level LpA < 70 dB (all types) at maximum back pressure (water) .

1.2.9 DULCOWALL Overview

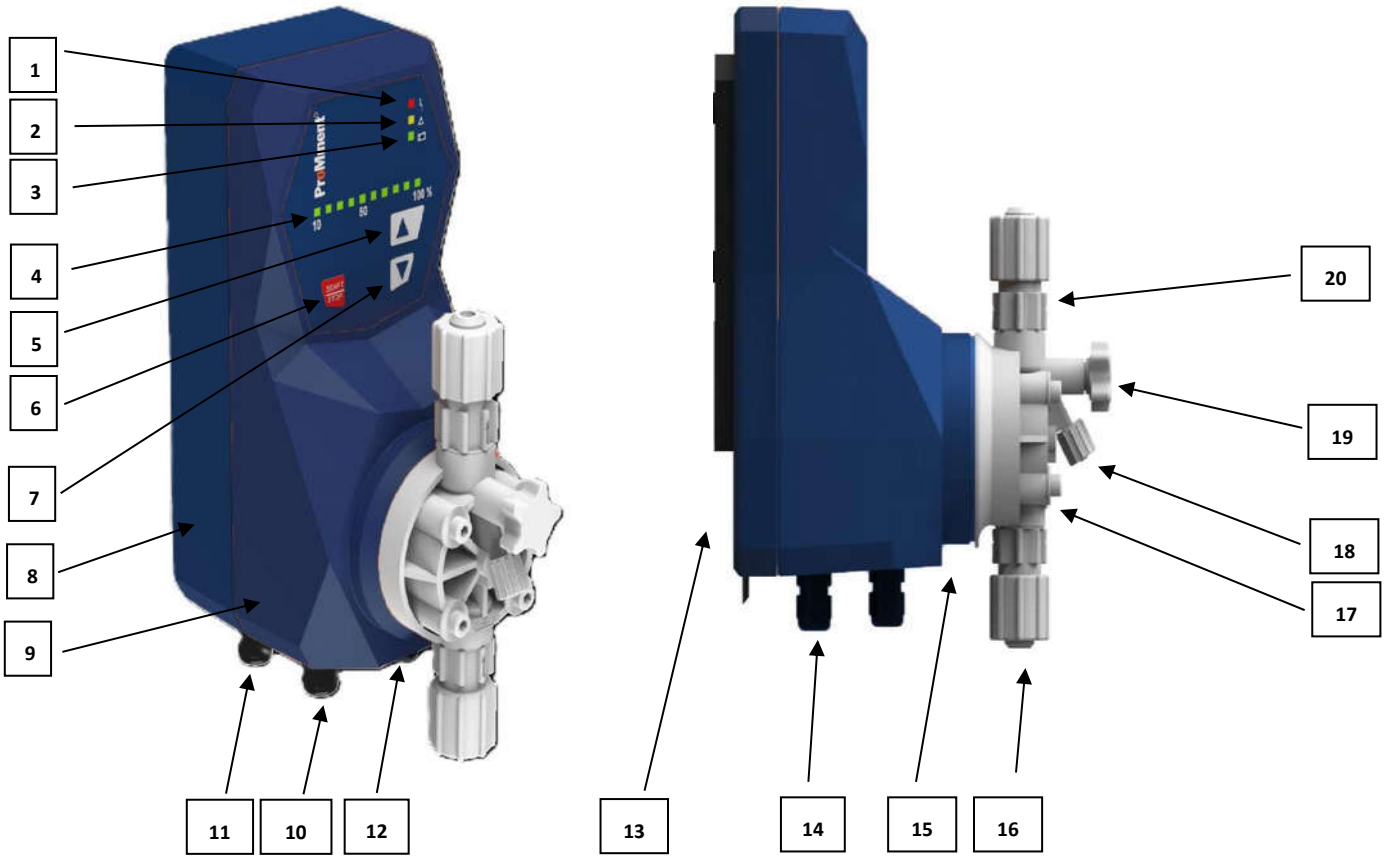

1 Fault indicator (red)
2 Warning indicator (yellow)
3 Operating indicator (green)
4 Stroke frequency indication
5 UP key
6 START/STOP key
7 DOWN key
8 Housing
9 Hood
10 “Power supply” terminal
11 “External control” terminal
12 “Limit switch” terminal
13 Wall mount clip
14 “Failure relay” terminal
15 Backplate
16 Suction valve
17 Dosing head
18 Bypass hose sleeve
19 Bleed valve
20 Discharge valve

1.3.0 DULCOWALL Advanced Overview

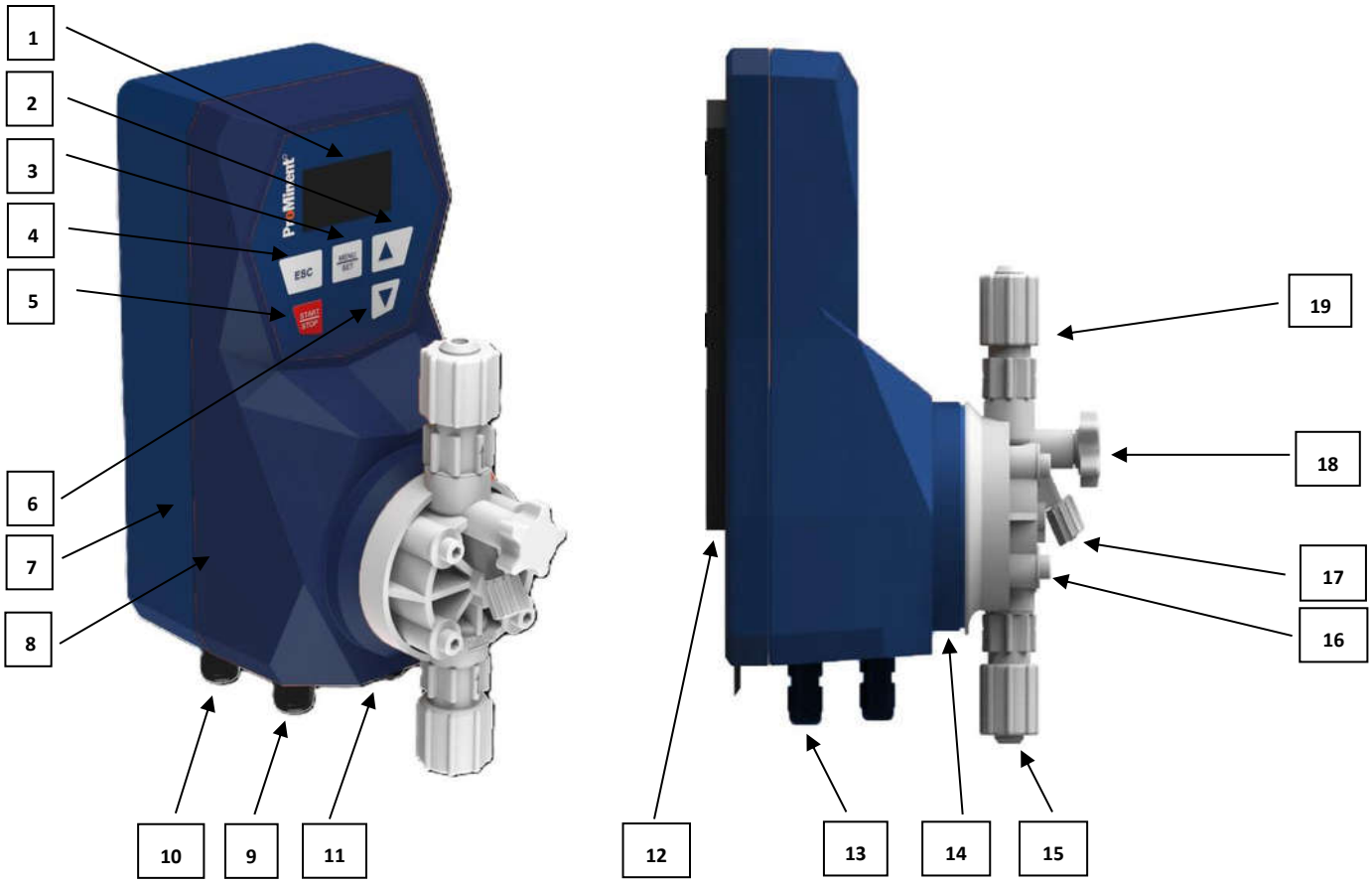

1 Display
2 UP key
3 Menu/SET key
4 ESC key
5 START/STOP key
6 DOWN key
7 Housing
8 Hood
9 “Power supply” terminal
10 “External control” terminal
11 “Limit switch” terminal
12 Wall mount clip
13 “Failure relay” terminal
14 Backplate
15 Suction valve
16 Dosing head
17 Bypass hose sleeve
18 Bleed valve
19 Discharge valve

2. Installation



WARNING

Warning about personal and material damage

The metering pump can contain water residue in the liquid end as the result of testing at the factory! If handling media, which must not come in contact with water, all traces of water must be removed from the liquid end before start-up! For this purpose, turn the pump through 180° and drain off the liquid end then flush with a suitable medium from above via the Intake connection**.**



CAUTION!

Pumps must be accessible at all times to facilitate operation and maintenance. Access points must not be obstructed or blocked!

When operating the metering pump against a closed shutoff Element on the delivery side, the resulting pressure buildup can reach a multiple of the maximum permissible backpressure! This can cause the delivery line to burst! To avoid this, it is advisable to install a multifunction valve which limits the maximum pressure which can be reached!



CAUTION!

Only use the clamping rings and tube nozzle intended for the relevant hose diameter as well as original hoses with the specified hose size and wall thickness otherwise the stability and durability of the connection will not be guaranteed!

Avoid reducing hose sizes!

The next higher line cross-section or a pulsation damper should be used for longer lines and high-viscosity media.



CAUTION!

Warning of feed chemical spraying around.

The pipes can loosen or rupture if they are not installed correctly.

- Route all hose lines so they are free from mechanical stresses and kinks.
- Only use original hoses with the specified hose dimensions and wall thicknesses.
- Only use clamp rings and hose nozzles that are intended for the hose diameter in question to ensure the long service life of the connections.



CAUTION!

Warning of feed chemical spraying around.

PTFE seals, which have already been used / compressed, can no longer reliably seal a hydraulic connection.

- Always use new, unused PTFE seals.



CAUTION!

Warning of excessive demand.

The pump can meter too much if there is a negative pressure difference between the discharge and suction sides.

-For example with a free outlet, use aback pressure valve with a minimum opening pressure of 1.5 bar (not possible with 0213)



CAUTION!

Warning of destruction of the pump.

An incorrect mains voltage or mains frequency can irreparably destroy the metering pump.

- Check that the mains voltage and frequency agree with the values given on the nameplate.



CAUTION!

Possibility of your switching relay contacts bonding

The high starting current can cause the contacts of the switching relay to bond together if the mains voltage switches a solenoid metering pump on and off in a process.

- Use the switching options offered by the external contact to control the pump (functions: Pause or Contact).



CAUTION!

Material damage possible due to power surges

Should the pump be connected to the mains power supply in parallel to inductive consumers (such as solenoid valves, motors), inductive power surges can damage the control when it is switched off.

- Provide the pump with its own contacts (Phase) and supply with voltage via a contactor relay or relay.



CAUTION!

Warning against illegal operation.

Observe the regulations that apply where the unit is installed**.**



Capacity too low

The liquid end valves can be disturbed by vibrations.

-Secure the metering pump to ensure that no vibrations can occur.

2.1 Pump installation to a wall

Mount metering pump on a wall via the wall mount clip with 4 bolts and U-washers (ϕ5mm).
To ensure efficient operation, the valves of the liquid end must always be positioned vertically

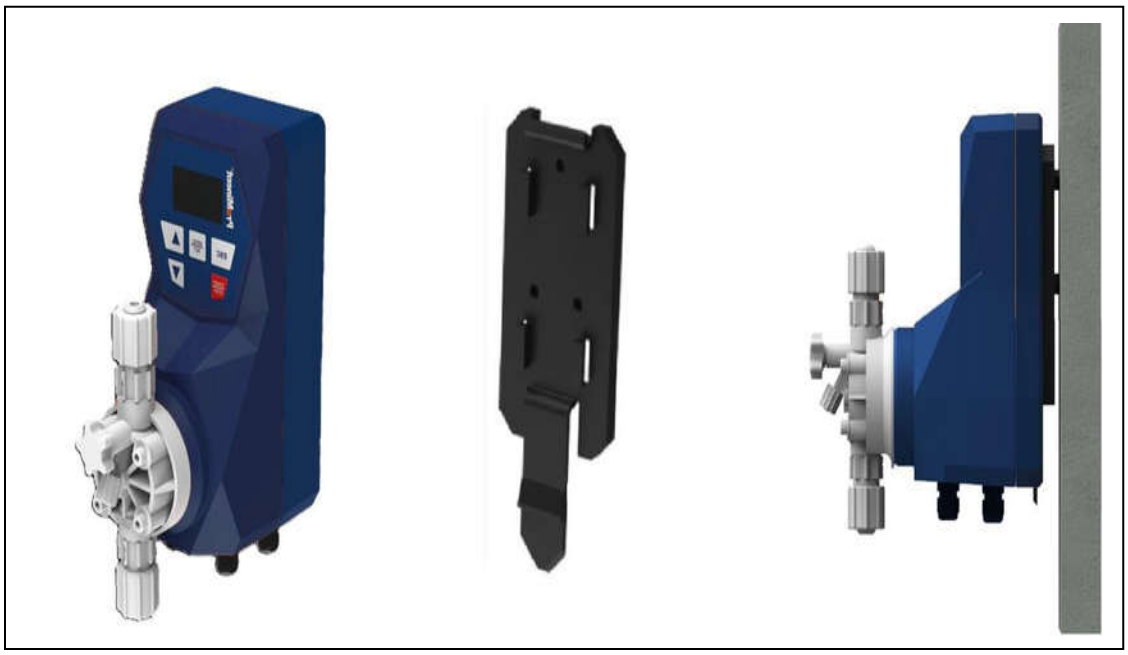

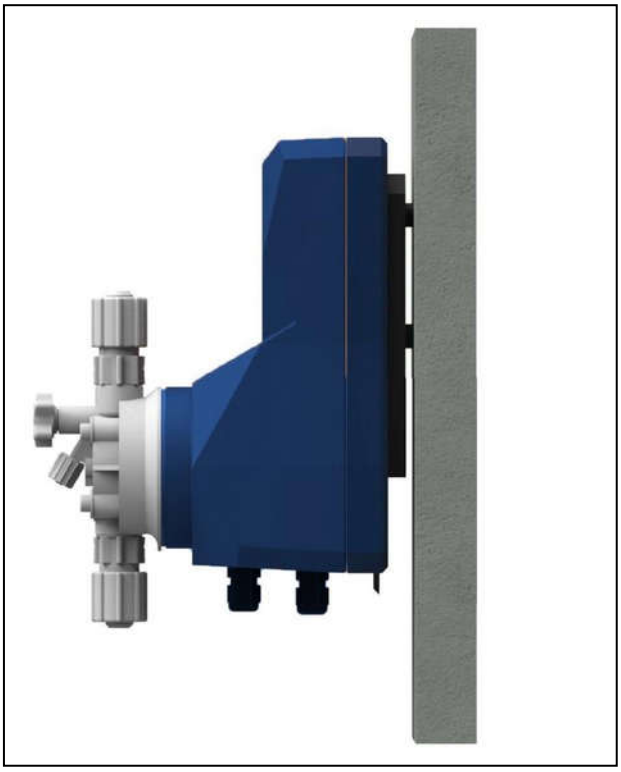

2.2 Hose Line Installation

1. Assemble the metering pump on a wall via the wall mount clipwith bolts and U-washers (ϕ5mm).
2. Cut the discharge hose to the required length.
3. Pull the union nut and clamping ring over the hose line,
4. Push the shortened hose end up to the stop over the nozzle.
5. Press the hose on and tighten the union nut.
6. Install the suction line.

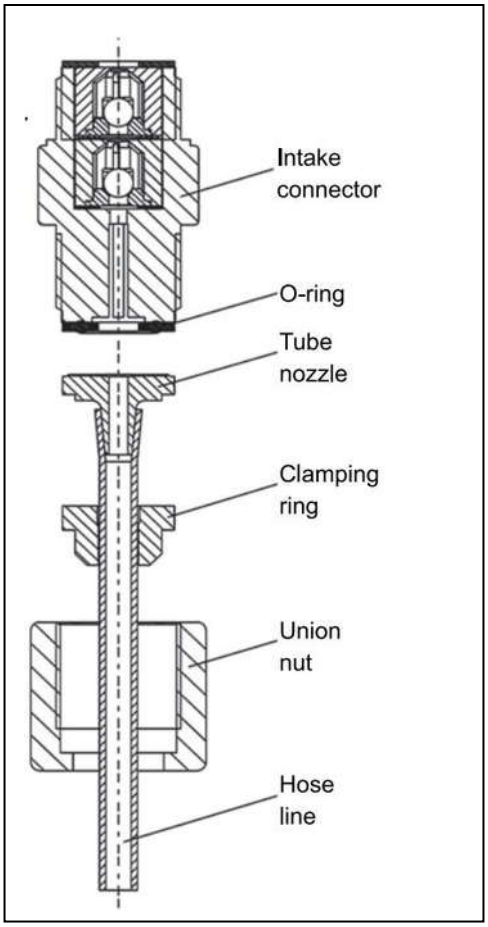

To do this, shorten the free end of the suction line so that the foot valve hangs just above the base of the storage tank.

With feed chemicals with impurities or sediment, shorten the free end of the suction line so that the foot valve hangs at least 50mm above the base of the storage tank.

Keep the suction line and the suction height as short as possible.

Route the suction line with an upwards slope.

77. Install a foot valve.
8. Install discharge and backpressure for free outlet.

2.3 Installation of Bypass Bleed Line

- The bleed valve (5) with bypass (3) is provided on the liquid end.
- Fit a hose on to bypass tube nozzle (3), preferably use 6 x 4mm soft PVC.
- If PE lines are used, secure with a cable tie to prevent slipping.
- Insert free end of hose line in metering tank.

3 Operation and Setting

3.1 Setting Manual mode for DULCOWALL

Starting the pump:

- Push START/STOP button to start the pump > Operation indicator (3) is green blinking which shows pump is in operation

Stopping the pump

- Push START/STOP button to stop the pump > The operating indicator (3) lights up green continuously and indicates that the pump is not in operation. Green also means that the pump is ready for operation

Setting flowrate:

Flowrate is setted by stroke frequency using buttons 5 and 7.

- Button 5 for increasing stroke frequency in steps of 10%
- Button 7 for decreasing stroke frequency in steps of 10%

3.2.0 Setting and wiring external mode

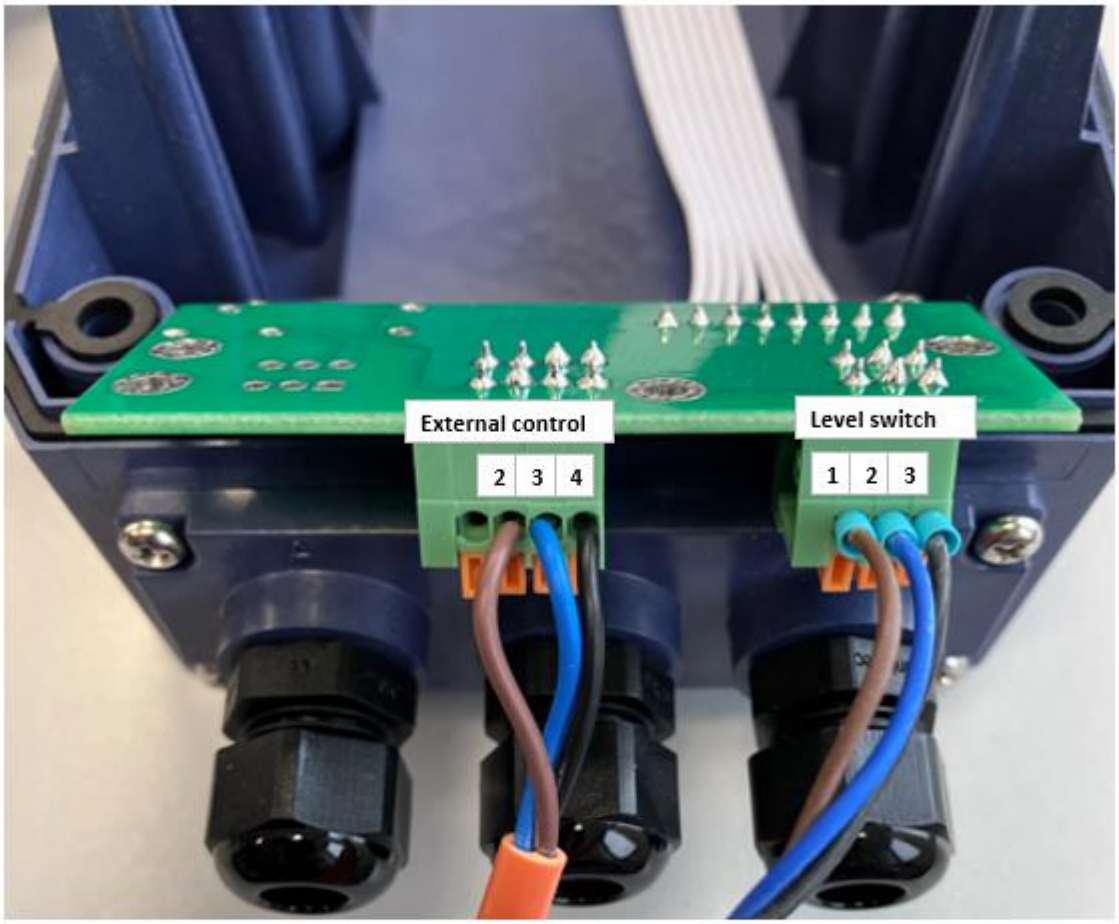

	Cable gland			
Terminals	**External control**	**Cable color**	**Level switch**	**Cable color**
Terminal 1	Ground	-	Ground	Brown
Terminal 2	Enable	Brown	L1	Blue
Terminal 3	Pulse	Blue	L2	Black
Terminal 4	Current	Black	-	-

External control	
Pause function	Pump is running as long as Black + Blue wire are not connected
	Pump is paused as long as Black + Blue wire are connected
Contact function	Black + Blue wire have to be connected
	Pump is doing a stroke as long Blue gets on contact with Black + Blue

3.2.1 Wiring level switch

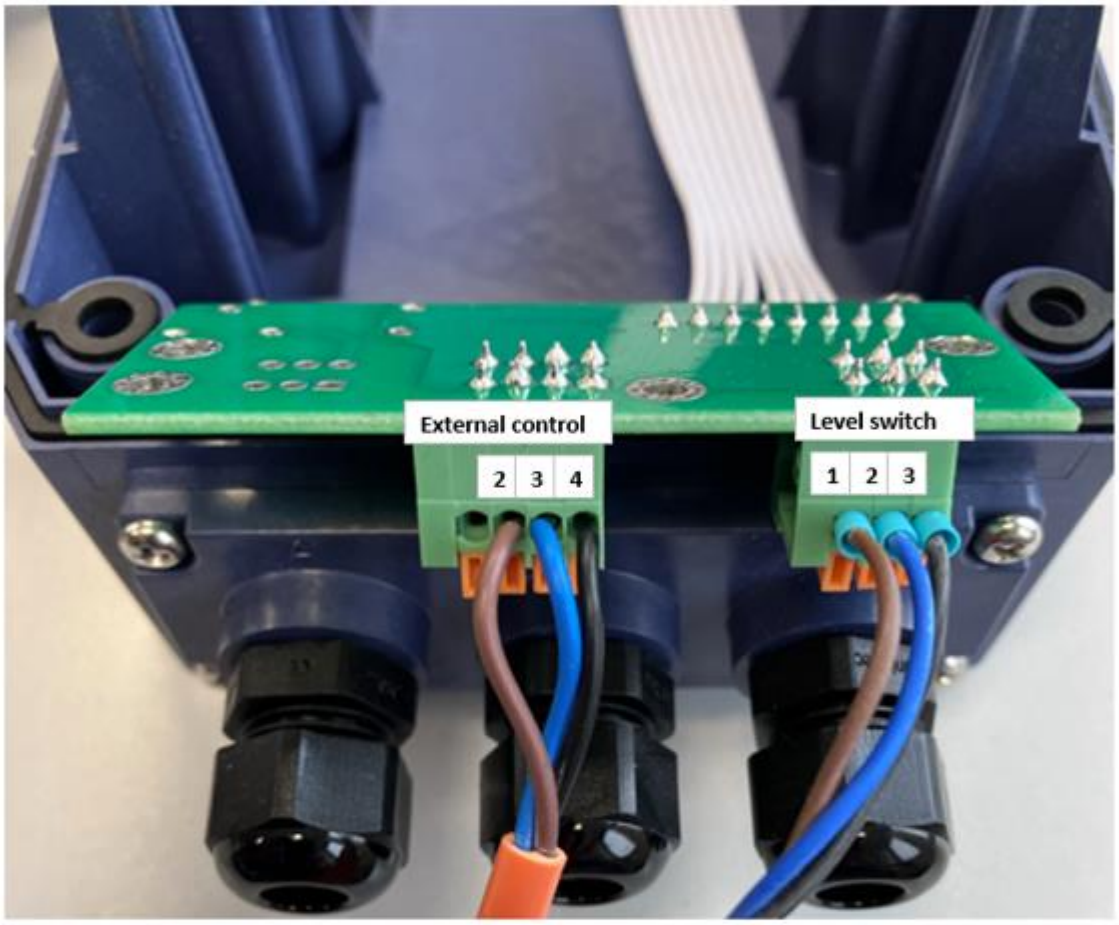

	Cable gland			
Terminals	**External control**	**Cable color**	**Level switch**	**Cable color**
Terminal 1	Ground	-	Ground	Brown
Terminal 2	Enable	Brown	L1	Blue
Terminal 3	Pulse	Blue	L2	Black
Terminal 4	Current	Black	-	-

Level switch

A jumper plug is plugged into the terminal in the as-delivered state.
This jumper plug must be unplugged.
Level switch cable has to be plugged according table above to ensure that the LED warn and fault indication is working.
The pump is also stopped in the event of a fault indication (tank empty).

3.2.2 Wiring relay and analogue function (for DULCOWALL ADVANCED)

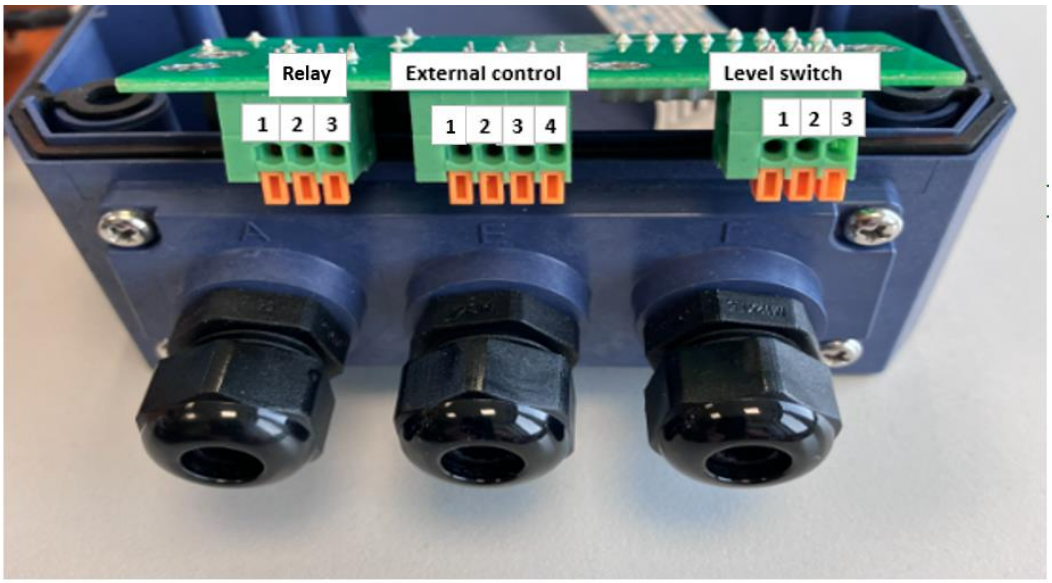

	Cable gland						
Terminals	Relay	Cable color	External control	Cable color (Pause and Contact function)	Cable color (Analogue function)	Level switch	Cable color
Terminal 1	C	Brown	Ground	-	Black	Ground	Brown
Terminal 2	NC	Green	Enable	Brown	Brown	L1	Blue
Terminal 3	NO	White	Pulse	Blue	-	L2	Black
Terminal 4	-	-	Current	Black	Blue	-	-

External control

Pause functi Pump is running as long as Black + Blue wire are not connected
Pump is paused as long as Black + Blue wire are connected

Contact fun Black + Blue wire have to be connected
Pump is doing a stroke as long Blue gets on contact with Black + Blue

Analogue function

Level switch

A jumper plug is plugged into the terminal in the as-delivered state.
This jumper plug must be unplugged.
Level switch cable has to be plugged according table above to ensure that the LED warn and fault indication is working.
The pump is also stopped in the event of a fault indication (tank empty).

Relay

The brown wire of the relay cable must be connected to socket “C”
The green wire must be connected to "NC"
The white wire must be connected to "NO"

3.2.3 Setting operation modes for DULCOWALL Advanced

Setting for Manual mode:

- Push button MENU/SET (3)
- Select Mode by using button DOWN (6) and confirm with button MENU/SET (3)
- Select Manual by using button DOWN (6) and confirm with button MENU/SET (3)
- Push button ESC (4) for leaving the menu
- Push button START/STOP (5) to start the pump
- Push button START/STOP (5) to stop the pump

Setting stroke frequency for Manual mode:

Stroke frequency can be set during pump running and also when it is stopped.

- Push button MENU/SET (3)
- Select Setting by using button DOWN (6) and confirm with button MENU/SET (3)
- Select Manual frequency by using button DOWN (6) and confirm with button MENU/SET (3)
- Change the stroke frequency by using button UP (2) and DOWN (6) and button START/STOP (5)
- Confirm the set stroke frequency with button MENU/SET (3)
- Leave menu by pushing ESC button (4) two times

Setting for Analogue mode:

- Push button MENU/SET (3)
- Select Mode by using button DOWN (6) and confirm with button MENU/SET (3)
- Select Analogue by using button DOWN (6) and confirm with button MENU/SET (3)
- Select 4-20 mA or 0-20 mA by using button UP (2) or DOWN (6) and confirm with button MENU/SET (3)
- Leave menu by pushing ESC button (4)
- Display is illuminated red colored if no cable is connected on terminals or if no analog signal is active

Setting for Contact mode:

- Push button MENU/SET (3)
- Select Mode by using button DOWN (6) and confirm with button MENU/SET (3)
- Select Contact by using button DOWN (6) and confirm with button MENU/SET (3)
- Select Contact Adaptive ON or OFF by using button UP (2) or DOWN (6) and confirm with button MENU/SET (3)
- Select Contact Memory ON or OFF by using button UP (2) or DOWN (6) and confirm with button MENU/SET (3)
- Change the Contact Factor by using button UP (2) and DOWN (6) and button START/STOP (5)
- Confirm the set Contact Factor with button MENU/SET (3)
- Leave menu by pushing ESC button (4) two times

Specialty of Contact mode:

- **Adaptive:** If the gaps between the pulses (e.g. from a contact water meter) slowly change, you can activate “Adaptive”. The pump will then dose more regularly.

- **Memory**: If the memory function is activated, contacts (e.g. from a contact water meter) that are sent to the pump while it is processing a contact sequence are stored in the memory. The contacts in the memory are then processed as soon as the active contact sequence is completed. This ensures that no external contact is lost.

Setting for Batch mode:

- Push button MENU/SET (3)
- Select Mode by using button DOWN (6) and confirm with button MENU/SET (3)
- Select Batch by using button DOWN (6) and confirm with button MENU/SET (3)
- Select Contact Memory ON or OFF by using button UP (2) or DOWN (6) and confirm with button MENU/SET (3)
- Select number of strokes by using button UP (2) and DOWN (6) and button START/STOP (5)
- Leave menu by pushing ESC button (4) two times

3.2.4 Timer setting for DULCOWALL Advanced

The DULCOWALL Advanced allows a Timer event action combined with an operation mode as follows:

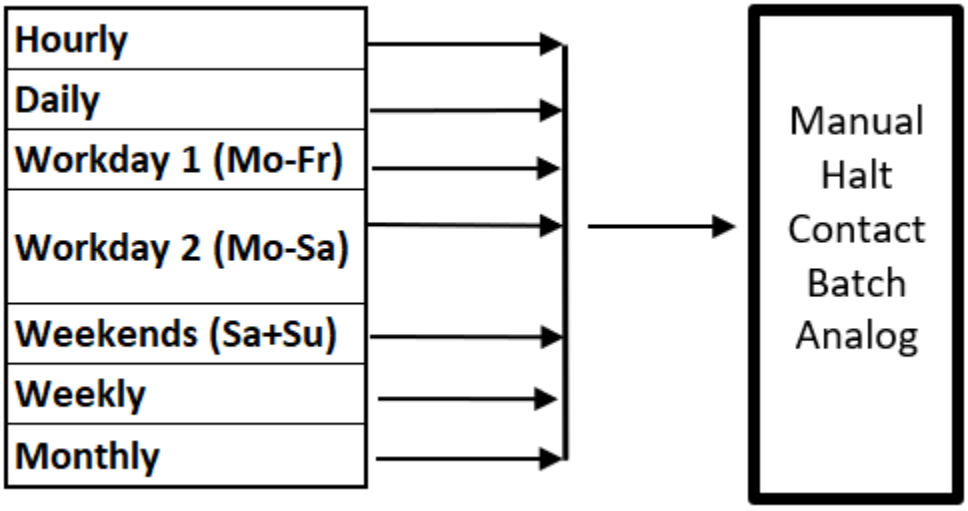

Please follow the steps in the pump menu for the Timer setting and on page 26 in operation manual.

3.2.5 Service setting for DULCOWALL Advanced

Following setting can be done in the Service menu:

- **Clear Counters:** Stroke counter can be set to 0 strokes
- **About:** Serial number and software version can be checked
- **Factory setting:** All settings can be switched back to first commissioning

3.2.6 Menu DULCOWALL Advanced

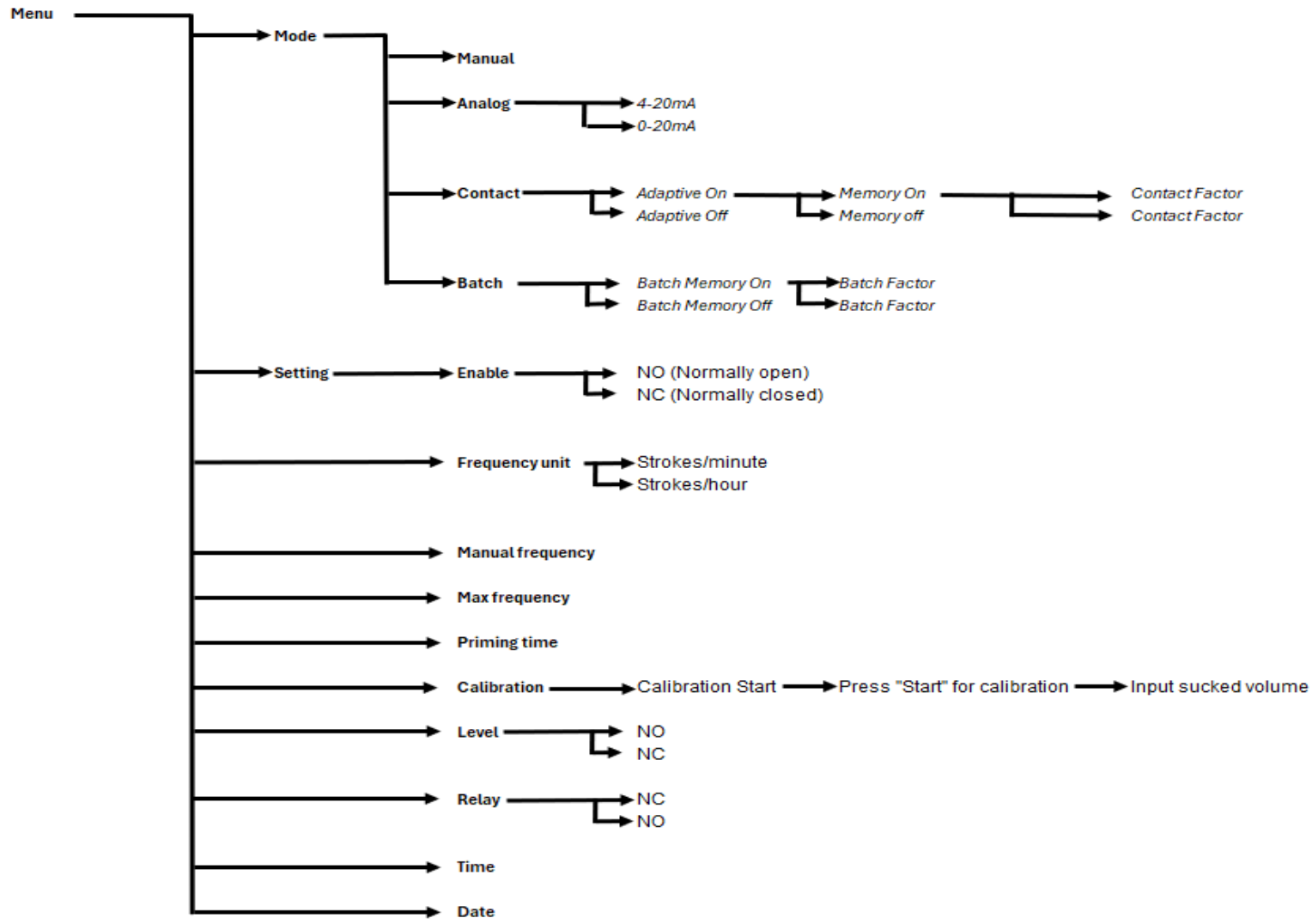

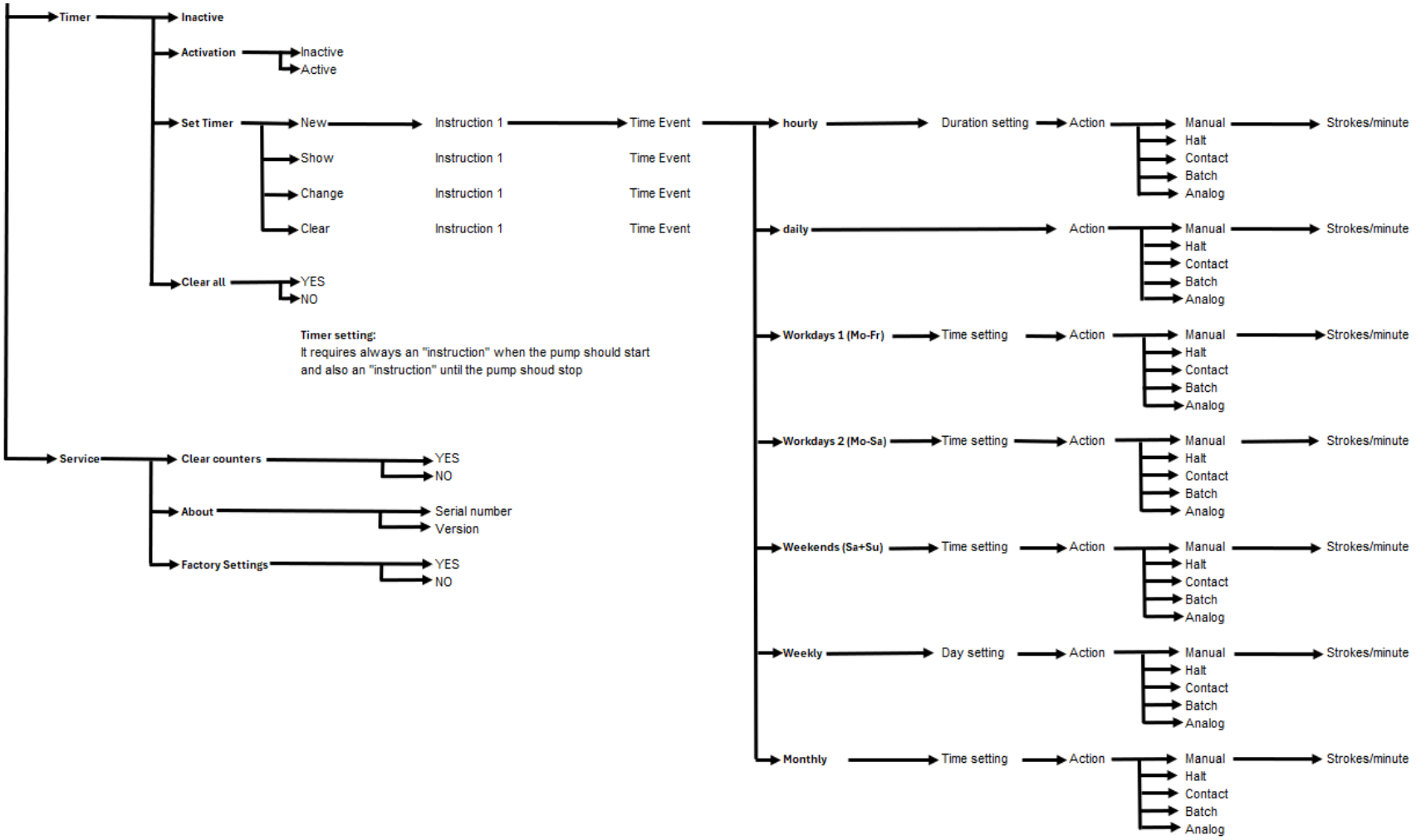
Timer
Inactive
Activation
Inactive
Active
Set Timer
New
Instruction 1
Time Event
Show
Instruction 1
Time Event
Change
Instruction 1
Time Event
Clear
Instruction 1
Time Event
Clear all
YES
NO
Timer setting:
It requires always an "instruction" when the pump should start
and also an "instruction" until the pump shoud stop
hourly
Duration setting
Action
Manual
Halt
Contact
Batch
Analog
Strokes/minute
daily
Action
Manual
Halt
Contact
Batch
Analog
Strokes/minute
Workdays 1 (Mo-Fr)
Time setting
Action
Manual
Halt
Contact
Batch
Analog
Strokes/minute
Workdays 2 (Mo-Sa)
Time setting
Action
Manual
Halt
Contact
Batch
Analog
Strokes/minute
Weekends (Sa+Su)
Time setting
Action
Manual
Halt
Contact
Batch
Analog
Strokes/minute
Weekly
Day setting
Action
Manual
Halt
Contact
Batch
Analog
Strokes/minute
Monthly
Time setting
Action
Manual
Halt
Contact
Batch
Analog
Strokes/minute
Service
Clear counters
YES
NO
About
Serial number
Version
Factory Settings
YES
NO

4. Maintenance and Repairs



WARNING

Only qualified electricians are permitted to carry out electrical repairs. Disconnect power plug or power supply line before opening the pump! Isolate relay option if applicable! Check to ensure power is disconnected! Secure pump while carrying out repairs to ensure it cannot be switched on unintentionally!

Always depressurize the delivery line first before carrying out any work on the pump! Always discharge and flush liquid end! Observe safety data sheets for metered liquid!

The liquid used to flush liquid end should not corrode the dosing head..



CAUTION!

Before carrying out any maintenance and repair work always drain off and flush out the liquid end first if hazardous or unknown metered media are used! Observe data sheets of metered liquids!

4.1 Maintenance

Interval	Maintenance work	Personnel
Quarterly*	▪Check the metering diaphragm for damage** - refer to “repair” ▪Check that the hydraulic lines are fixed firmly to the liquid end. ▪Check that the suction valve and discharge valve are correctly seated. ▪Check the leak – tightness of the entire liquid end – particularly around the leakage hole. ▪Check that the flow is correct : Allow the pump to prime briefly – turn the multifunction switch briefly to “100%” ▪Check that the electrical connections are intact ▪Check the integrity of the housing ▪Check that the dosing head screws are tight In addition: ▪Check that the bypass line is fixed firmly to the liquid end ▪Check that the bleed valve is tight ▪Check the discharge and bypass line for kinks ▪Check that the bleed valve is operating correctly	Technical personnel

*Under normal loading (approx.30% of continuous operation)

Under heavy loading (e.g. continuous operation): shorter intervals.

**For feed chemicals which particularly load the diaphragm, e.g. those containing abrasive additives, check the diaphragm frequently.

Tightening torque

Specification	Value	Unit
Tightening torque for screws	4.5…5.0	Nm

4.2 Replacing the Metering Diaphragm

- If necessary take protective measures.
- Adhere to the safety data sheet for the feed chemical
- Ensure that the system is at atmospheric pressure.

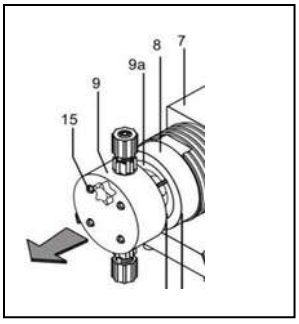

1. Empty the liquid end (turn the liquid end upside down and allow the feed chemical to turn out; flush out with a suitable medium; flush the liquid end thoroughly when using hazardous feed chemical).
3. Switch off the pump
4. Unscrew the hydraulic connectors on the discharge and suction side.
5. Remove the screw (15)
6. Loosen the dosing head (9) and the backplate (8) from the pump housing (7) but only loosen.

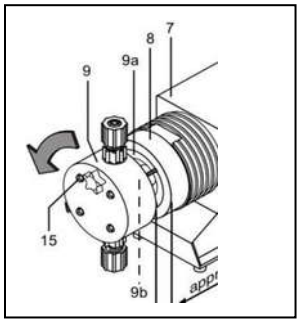

7. Hold the pump housing (7) with one hand and clamp the diaphragm(9a) by using the other hand clamping the dosing head(9) and the backplate(8)
8. Loosen the diaphragm (9a) from the drive axle with a gentle backwards turn of the dosing head (9), diaphragm (9a) and backplate (8) in an anticlockwise direction.
9. Unscrew the diaphragm (9a) completely from the drive axle (9b).

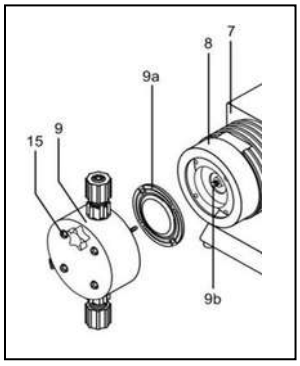

10. Remove the backplate (8) from the pump housing (7)
11. Check the condition of the safety diaphragm (5) and replace if necessary.
12. Push the safety diaphragm (5) onto the drive axle only until it lies flush with the pump housing (7) and no further.
13. Tentatively screw the new diaphragm (9a) onto the drive axle (9b) until it can go no further.

⟹ The diaphragm (9a) is now sitting at the stop of the thread.

14. Should this not work, remove dirt or swarf from the threads and screw the diaphragm (9a) onto the drive axle (9b) correctly this time.



Ensure that the diaphragm is screwed exactly onto the drive axle otherwise the pump will subsequently not meter accurately.

E

15. Unscrew the diaphragm (9a) again.
16. Place the backplate (8) onto the pump housing (7).



CAUTION!

Leakage may become apparent at a later stage.

-Make sure that the leakage hole points downwards when the pump is installed later.

-Place the backplate (8) immediately in the correct position on the pump housing (7)! Do not twist the backplate on the pump housing to prevent the safety diaphragm becoming warped!

17. Place the diaphragm (9a) into the backplate (8).



CAUTION!

Leakage may become apparent at a later stage.

Do not over-tighten the diaphragm (9a) in the following step!

Ensure that the backplate (8) remains in its position so that the safety diaphragm does not become warped!

18. Hold the backplate(8) firmly and screw the diaphragm (9a) in a clockwise Direction until it is sitting tightly (the twisting resistance of the return spring can be felt).
19. Set the stroke length to 100%
20. Place the dosing head (9) with the screws (15) onto the diaphragm (9a) and the backplate(8)-ensure that the suction connector points downwards when the pump is subsequently fitted.
21. Gently tighten the screws (15) and then tighten them diagonally. See below for tightening torque.



CAUTION!

Leakage possible

-Check the tightening torque of the screws after 24 hours of operation!

-With PVDF dosing heads, check the tightening torque again after three months!

22. Tightening torque for M5 screws: 4.5…5.0Nm.

5. Troubleshooting



WARNING!

Warning of hazardous feed chemical

Should a dangerous feed chemical be used: it may

escape from the hydraulic components when

working on the pump, material failure or incorrect handling of the pump.

- Take appropriate protective measures before working on the pump (e.g. safety glasses, safety gloves, ...). Adhere to the material safety data sheet for the feed chemical.
- Drain and flush the liquid end before working on the pump.



Warning!

Fire hazard with flammable media

Only with flammable media: They can be ignited by

oxygen.

- The pump may not work if there is a mixture of feed chemical with oxygen in the liquid end. A specialist may need to take appropriate actions (using inert gas, ...).



CAUTION!

Warning of chemical spraying around

Feed chemical may spray out of the hydraulic components

if they are tampered with or opened due to

pressure in the liquid end and adjacent parts of the system.

- Disconnect the pump from the mains power supply and ensure that it cannot be switched on again by unauthorised persons.
- Ensure that the system is at atmospheric pressure before commencing any work on hydraulic parts of the system.

Fault description	Cause	Remedy
Pump does not prime inspite of full stroke motion and bleeding.	Minor crystalline deposits on the ball seat due to the valves drying out.	Take the suction hose out of the storage tank and thoroughly flush out the liquid end.
	Major crystalline deposits on the ball seat due to the valves drying out.	Dismantle and clean the valves
Fluid is escaping from the backplate	The screws in the dosing head are too loose.	Tighten the screws in the dosing head crosswise – see below for the tightening torque.
	The diaphragm is not tight	Replace the diaphragm – refer to “Repair”
Fault/operating indicator does not illuminate	The wrong mains voltage or no mains voltage is connected	Connect the pump correctly to the specified mains voltage – according to the specification on the nameplate.
Fault/operating indicator is red.	The fluid level in the storage tank has reached “ liquid level low”	Fill the storage tank.
	Electronics fault	Return the pump
	External lock is not activated	If external mode is required, connect ext. control cable to make ext. lock activated

6 Spare Parts

In order to repair small breakdowns at any time we recommend to always keeping a spare parts kit in stock. This kit contains the following wearing or spare parts: 1 suction valve, complete; 1 discharge valve, complete; 1 set of seals; 2 valve balls; 1 diaphragm; 1 set of connection parts.

Pump type	Liquid end	Material number
0212 / 0215 / 0223	PVT	1084309
0306 / 0308 / 0313	PVT	1023112
0703 / 0803 / 0806	PVT	1023111
1001 / 1002 / 1003	PVT	1023110
1600 / 1601 / 1602 / 1603	PVT	1023109

7 Storage and Transport



WARNING!

Only return the metering pump for repair in a cleaned state and with a flushed liquid end. Refer to the section on decommissioning! Only return metering pump with a completed Decontamination declaration form. The Decontamination Declaration constitutes an integral part of an inspection/repair order. We can only inspect or repair a unit if a Decontamination Declaration is submitted that has been completed correctly and in full by an authorized and qualified person on behalf of the pump operator.

The “Decontamination Declaration Form” can be found at www.XXXXXXXX.com.

Ambient conditions

Data	Value	Unit
Minimum storage and transport temperature	-20	℃
Maximum storage and transport temperature	+60	℃
Maximum air humidity* (* non-condensing)	95	% rel. humidity
Ambient temperature in operation	-10…+45	℃

8. Decommissioning



WARNING!

Danger from chemical residues

There is normally chemical residue in the liquid end and on the housing after operation. This chemical residue could be hazardous to people.

-It is mandatory that the safety information relating to the “storage and transport” chapter is read before shipping or transporting the unit.

-Thoroughly clean the liquid end and the housing of chemicals and dirt. Observe the safety data sheet for feed chemical.



CAUTION!

Environmental hazard due to electronic waste

There are electronic components in the pump, which can have a toxic effect on the environment.

- Separate the electronic components from the remaining parts.

-Note the pertinent regulations currently applicable in your country!

9 Appendix

9.1 Declaration of power supply voltage

The power supply of instruments and metering pumps of Prominent ranges ±10% of the rated voltage。

For places where the power supply or the power surge is beyond the range, please install AC voltage-stabilized equipment. We don’t assume any liability for any damage caused by power supply out of range.

Read through the manual before use.

EC/EU Declaration of Conformity

Declaration of Conformity for machinery

For metering pumps

In accordance with the DIRECTIVE 2006/42/EC OF THE EUROPEAN PARLIAMENT AND OF THE COUNCIL, Appendix I, ESSENTIAL HEALTH AND SAFETY REQUIREMENTS, SECTION 1.7.4.2. C.

We,

- ProMinent GmbH
- Im Schuhmachergewann 5 - 11
- D - 69123 Heidelberg,

hereby declare that the product specified below complies with the relevant basic healt and safety requirements of the EC Directive on the basis of its functional concept and design and in the version marketed by us.

Designation of the product:	Metering pump. DULCOWALL and DULCOWALL Advanced
Product type:	
Serial number	See nameplate on the unit
Relevant EC directives	Machinery Directive (2006/42/EC) Compliance with the protection targets of the Low Voltage Directive (2014/35/EU) according to Appendix I, No. 1.5.1 of the Machinery Directive EMC Directive (2014/30/EU) RoHS Directive (2011/65/EU)
Harmonised standards applied, in particular:	EN ISO 12100:2010 EN 809:1998 + A1:2009 + AC:2010 EN 61010-1:2010 + A1:2019 + A1:2019/AC:2019 EN 61326-1: 2013 class B, industrial environment EN IEC 63000:2018
Datum	

You will find the EU Declaration of Conformity to download on our homepage.